MAGNUS
HOME PRODUCTS

Neo-Angle Solid Brass Shower Rod

SKU#: 109322

30” X 24” X 30”
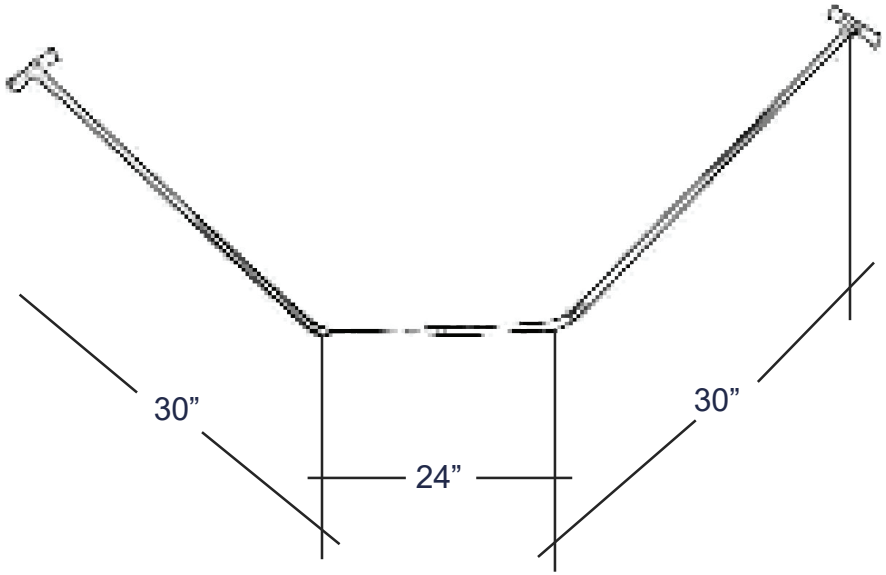
Rectangular Flange