MAGNUS HOME PRODUCTS

Winona Fireclay Vessel Sink

SKU# : 108314

Basin diameter: 17 1/4”
Base Diameter: 8 3/4”
Flange: 2 1/2” round x 2” deep
Height: 8 3/4”

Above Counter Height: 7 1/8”

Interior Dimensions:
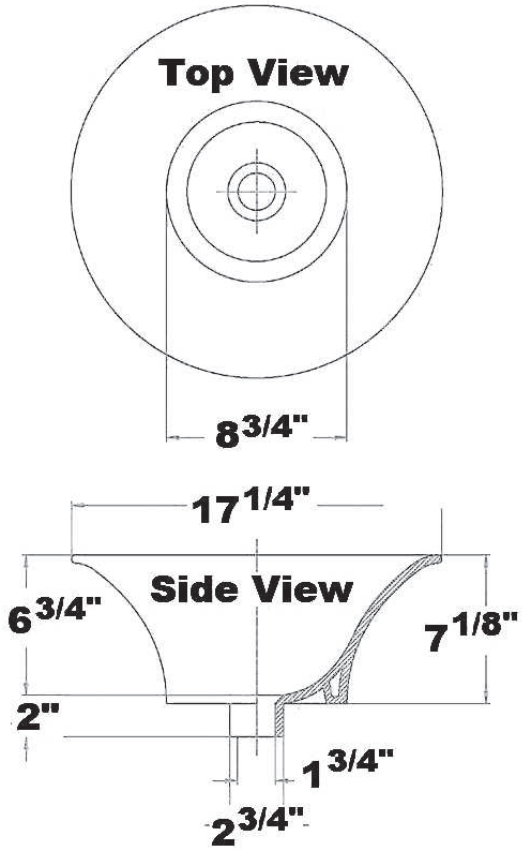
Diameter: 12”
Basin Depth: 6 3/4”