MAGNUS HOME PRODUCTS

Borth Single-Hole Bathroom Faucet

SKU# : 110385

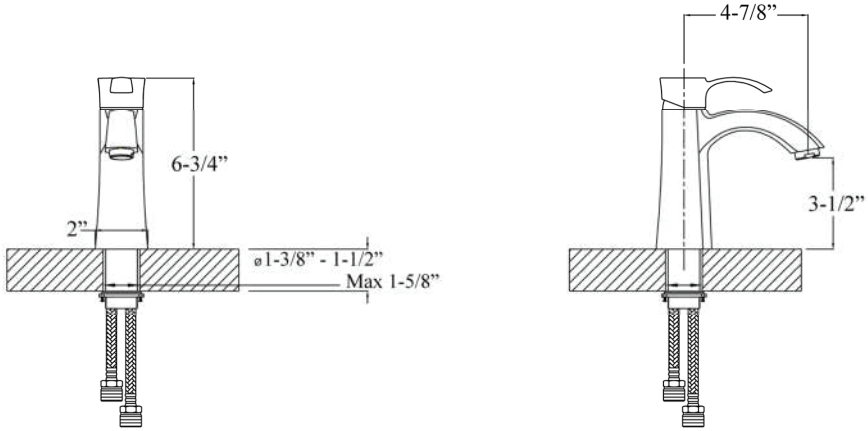

Spout Reach:	4-7/8”
Height:	6-3/4”