MAGNUS HOME PRODUCTS

Cezer Bridge Kitchen Faucet with Brass Sprayer

SKU # 141165

Overall Dimensions:

Length: 4”~8”
Height: 14 1/2”
Spout Reach: 8 1/4”
Spout Height: 11 1/2”

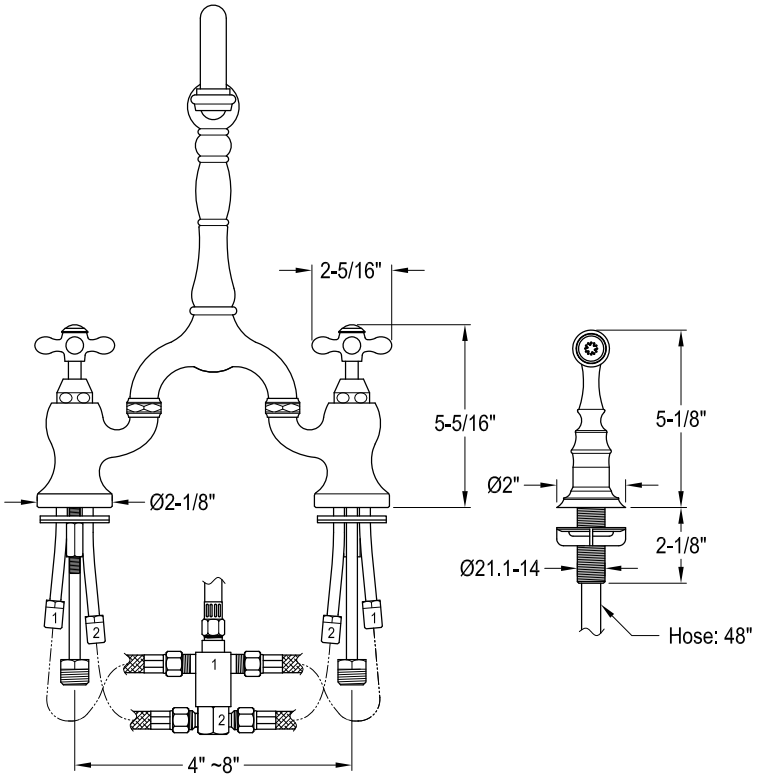

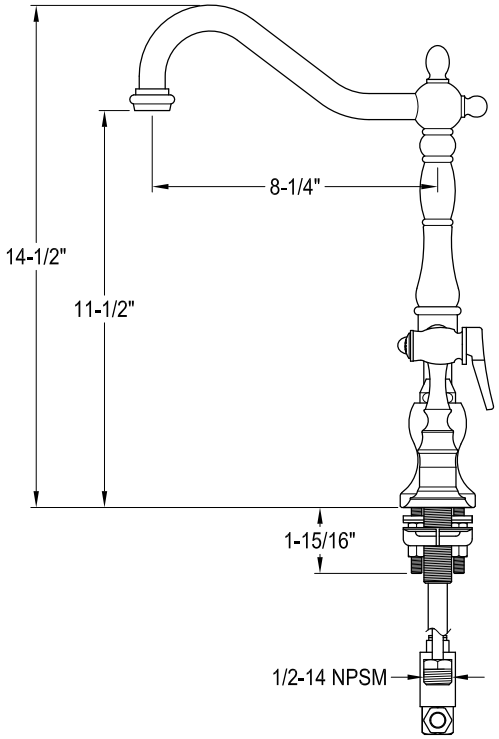

www.magnushomeproducts.com
PH: 833-482-6828

Dimensions of fixture and specification subject to change without notice.
Measurements are approximate & may vary +/- 1/2”