MAGNUS HOME PRODUCTS

Bentley Kitchen Faucet with Side Spray

SKU# : 121415

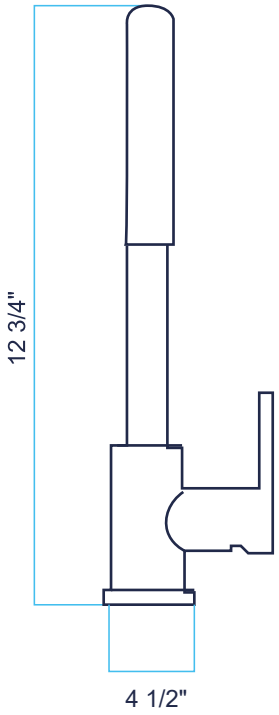

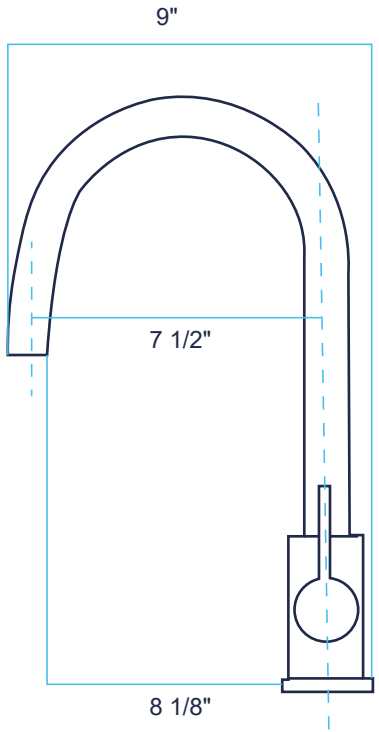

Length: 4 1/2"
Width: 9"
Height: 12 3/4"

Height to Spout: 8 1/8"
Spout Reach: 7 1/2"
Base Plate Diameter: 2 3/8"