MAGNUS HOME PRODUCTS

33" Rosman Handcrafted Single-Bowl Smooth Apron Farmhouse Sink - Distressed Baby Blue

SKU# 108760

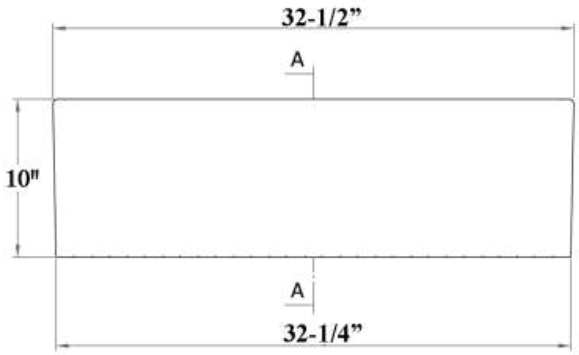

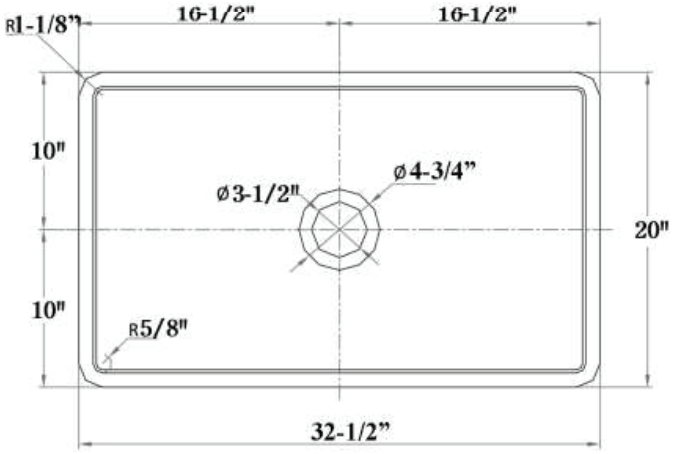

Top:	32-1/2” W x 20” D
Bottom	32-1/4” W x 19-1/2” D
H:	10”

Interior Bowl Dimensions:

Basin Interior:	31” W x 18-1/8” D
Basin Depth:	9”