MAGNUS HOME PRODUCTS

54" Lola Hammered Copper Range Hood

SKU # **150283**

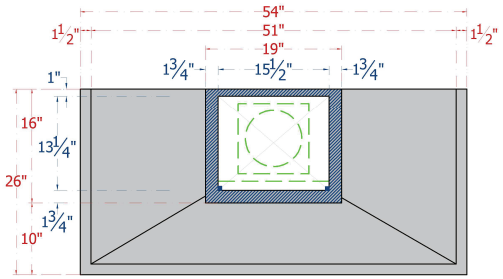

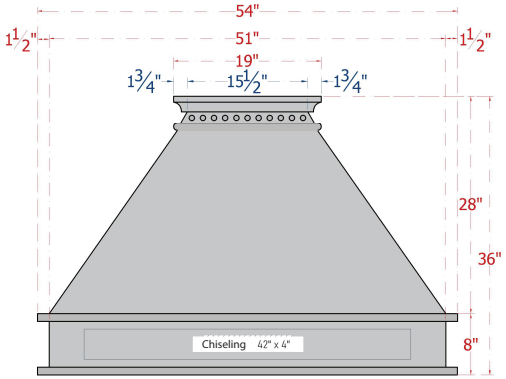

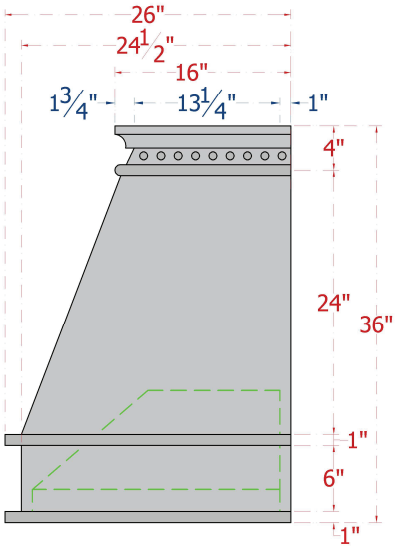

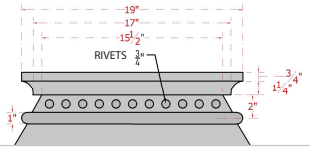

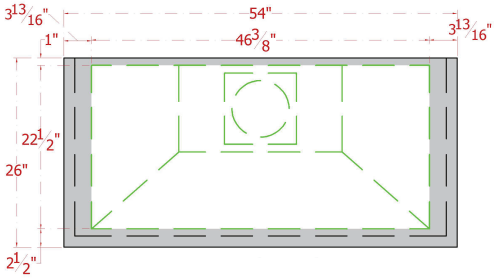

Overall Dimensions:

Length:	54”
Width:	26”
Height:	36”

www.magnushomeproducts.com
PH: 833-482-6828

Dimensions of fixture and specification subject to change without notice.
Measurements are approximate & may vary +/- 1/2”