MAGNUS HOME PRODUCTS

Hartwick Vitreous China Drop-In Sink

SKU# : 108183
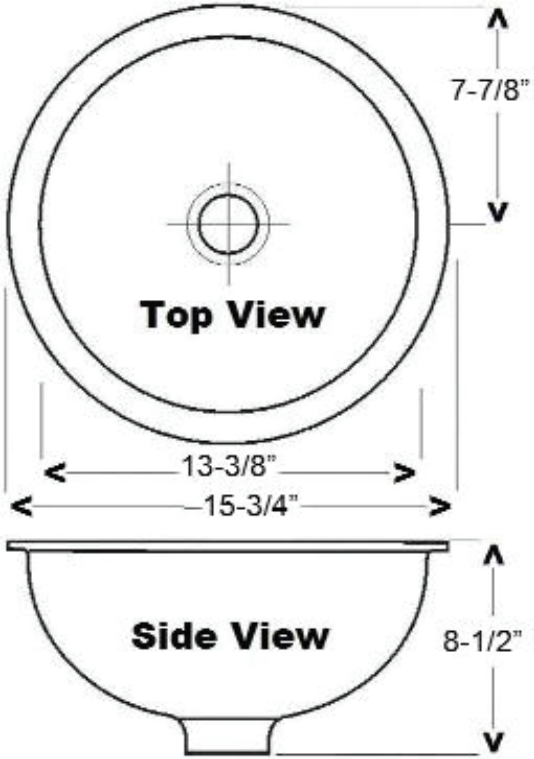
Basin diameter:	16” L x 15-¾” W
Height:	8-½”
Above Counter Height:	½”
Flange:	1-½”