MAGNUS HOME PRODUCTS

Gelger Freestanding Tub Faucet with Hand Shower

SKU # 142120

Overall Dimensions:

Length: 40 ¼”
Width: 7 ½”
Height: 7"
Hose Length: 59”

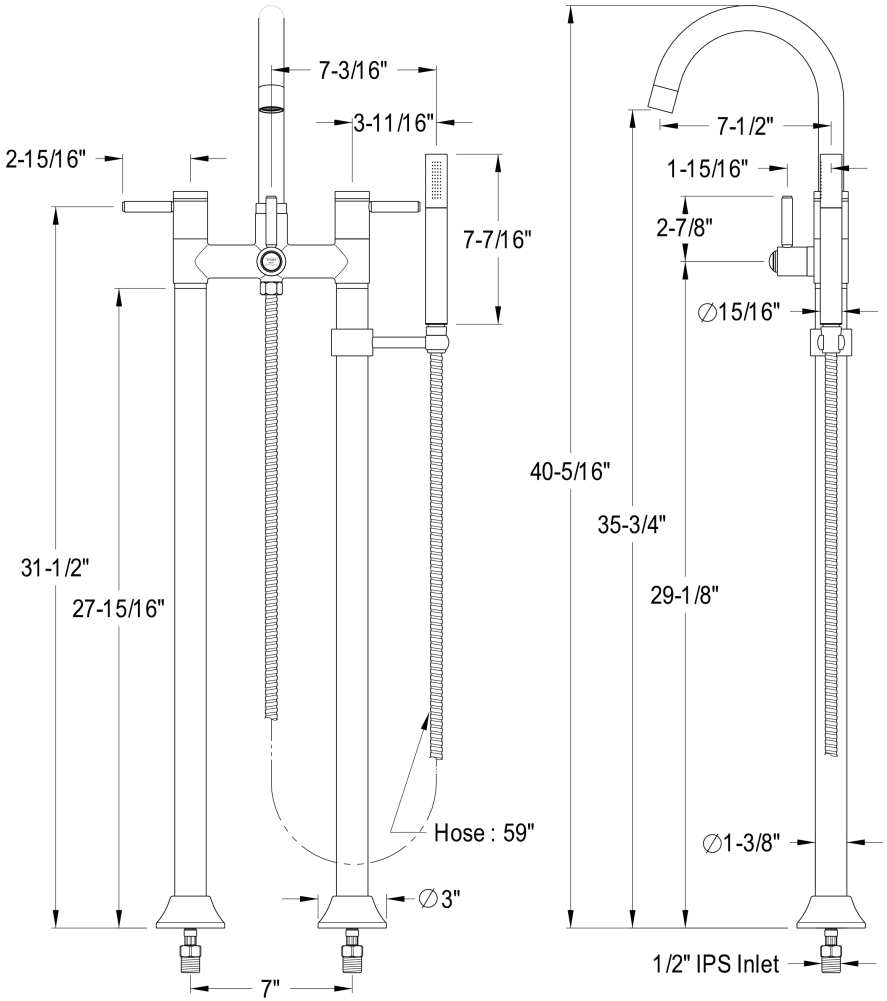

Dimensions of fixture and specification subject to change without notice.
Measurements are approximate & may vary +/- 1/2”