MAGNUS HOME PRODUCTS

20" Zadar Fireclay Wall-Mount Sink

SKU# 133041

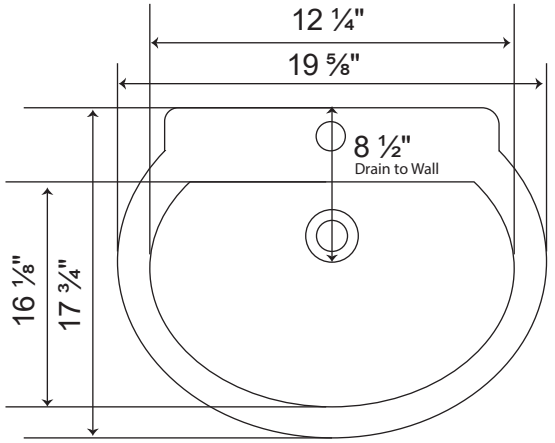

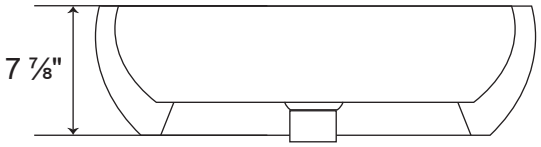

Overall Dimensions:

Length:	19 ⅝"
Width:	17 ¾"
Height:	7 ⅞"
Centers for Towel Bar:	22"

Interior Dimensions:

Length:	16 ⅛"
Width:	12 ¼"
Basin Depth to Overflow:	4”
Overall Basin Depth:	5 ½"

www.magnushomeproducts.com
PH: 833-482-6828

Dimensions of fixture and specification subject to change without notice.
Measurements are approximate & may vary +/- 1/2”