MAGNUS HOME PRODUCTS

Ronan Framed Vanity Mirror - French White

SKU#: 114367

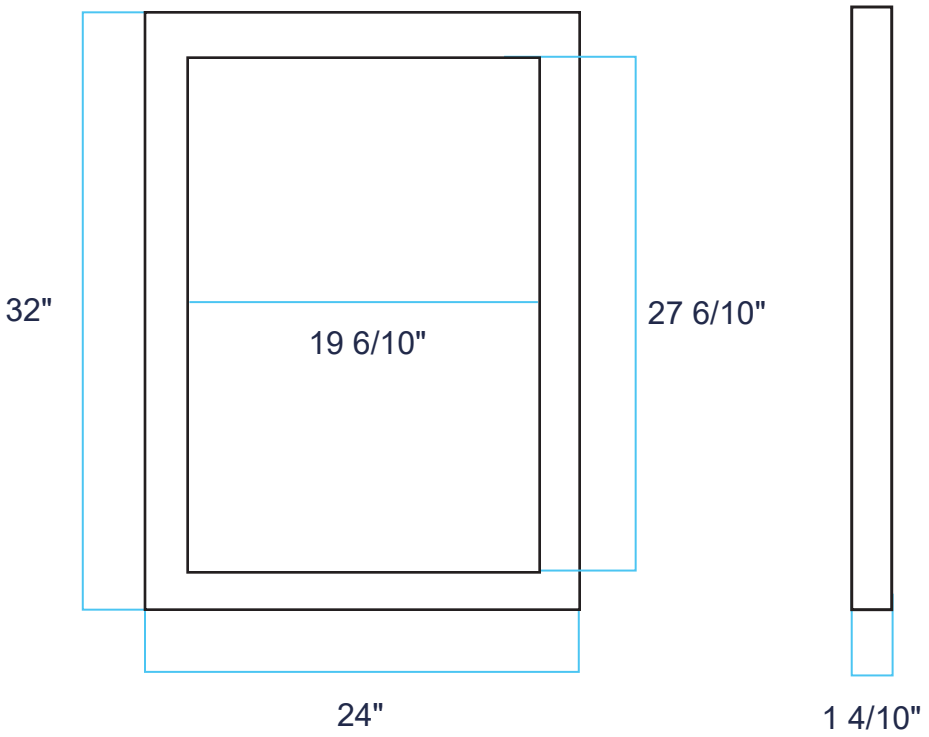

Overall Dimensions:

Length: 24"
Width: 1 4/10"
Height: 32"

Mirror Only Dimensions:

Length: 19 6/10"
Height: 27 6/10"