MAGNUS HOME PRODUCTS

38" Elias Hammered Copper Range Hood

SKU # **150284**

Overall Dimensions:

Length:	38”
Width:	23”
Height:	31”

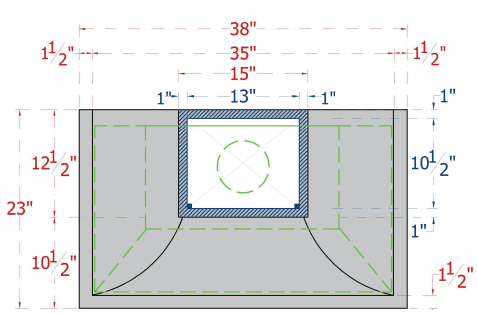

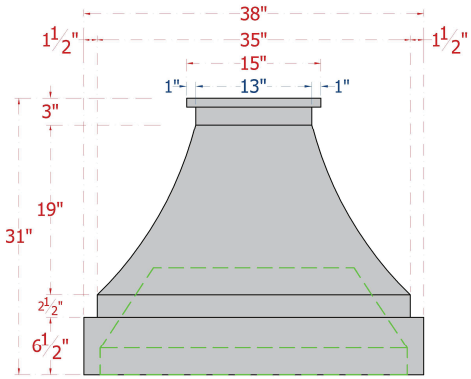

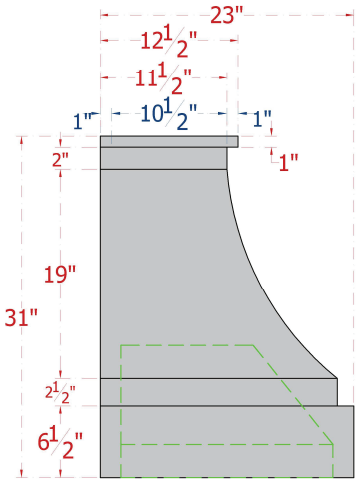

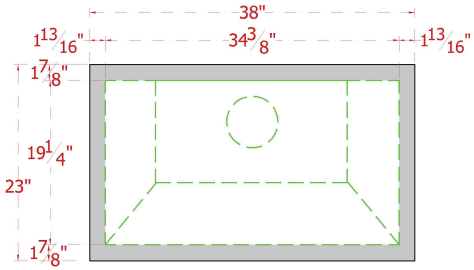

Dimensions of fixture and specification subject to change without notice.
Measurements are approximate & may vary +/- 1/2”