MAGNUS HOME PRODUCTS

Tigler Bridge Kitchen Faucet with Brass Sprayer

SKU # 141154

Overall Dimensions:

Length:	8”
Height:	11 5/8”
Spout Reach:	9”
Spout Height:	8 1/2”

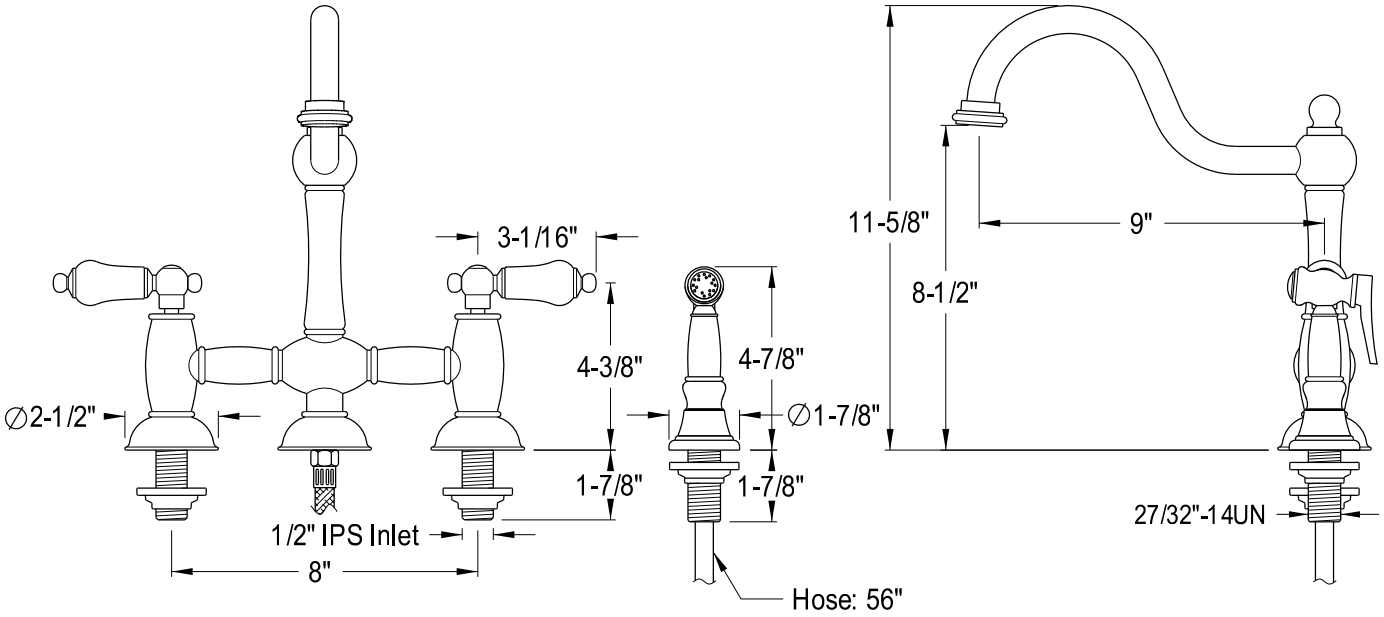

Dimensions of fixture and specification subject to change without notice.
Measurements are approximate & may vary +/- 1/2”