MAGNUS HOME PRODUCTS

40" Lola Hammered Copper Range Hood

SKU # **150283**

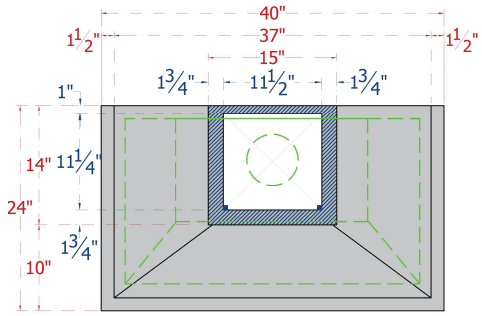

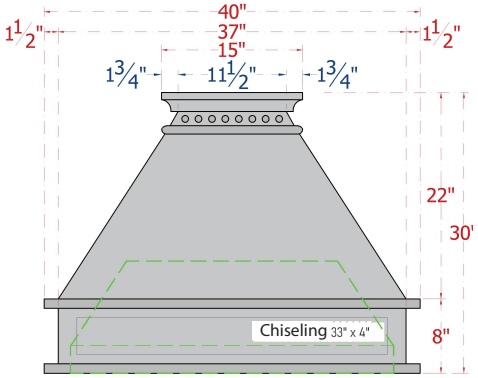

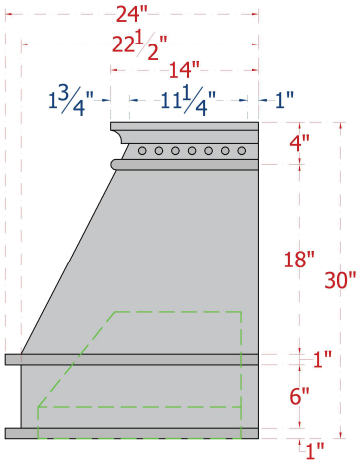

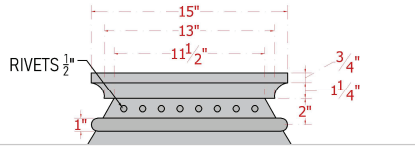

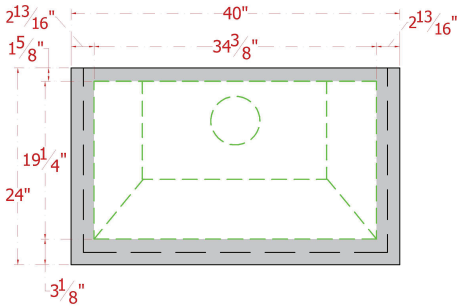

Overall Dimensions:

Length:	40”
Width:	24”
Height:	30”