MAGNUS HOME PRODUCTS

Reken Bridge Kitchen Faucet with Brass Sprayer

SKU # 141143

Overall Dimensions:

Length: 8”
Height: 13 1/8”
Spout Reach: 8 9/16”
Spout Height: 10 1/16”

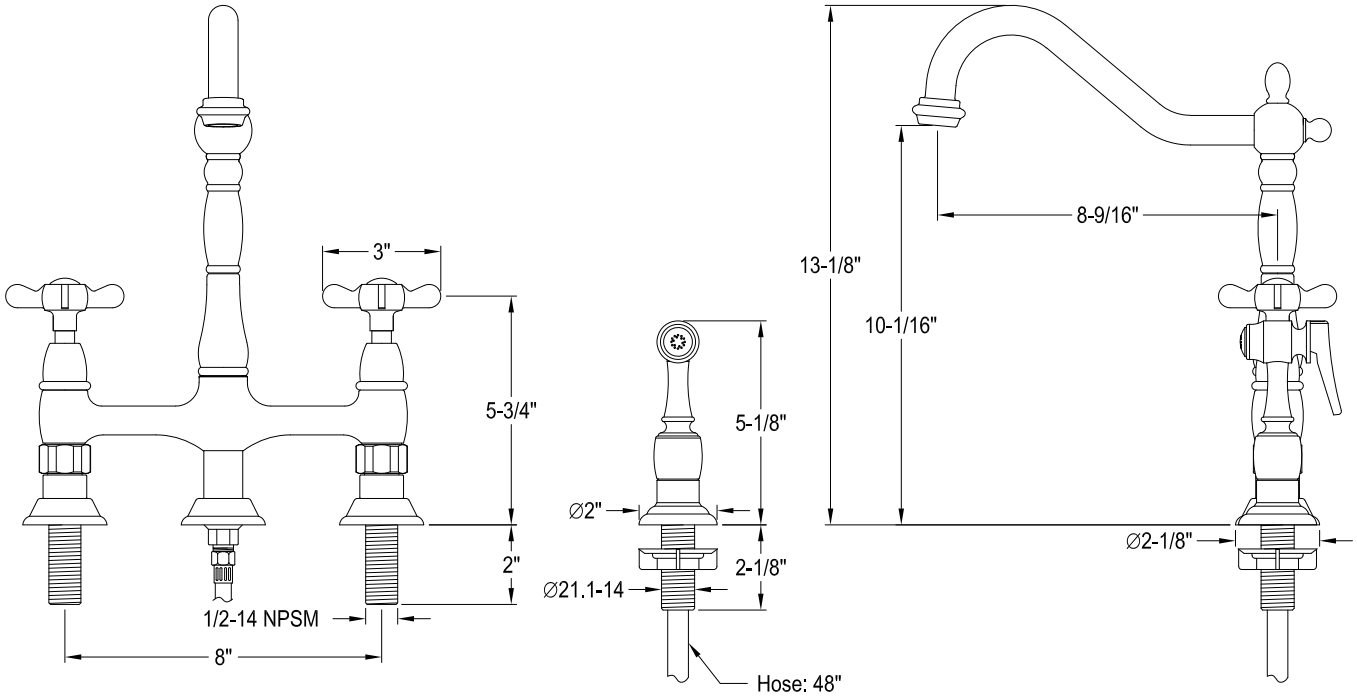

Dimensions of fixture and specification subject to change without notice.
Measurements are approximate & may vary +/- 1/2”