MAGNUS HOME PRODUCTS

Vazen Bridge Kitchen Faucet with Brass Sprayer

SKU # 141159

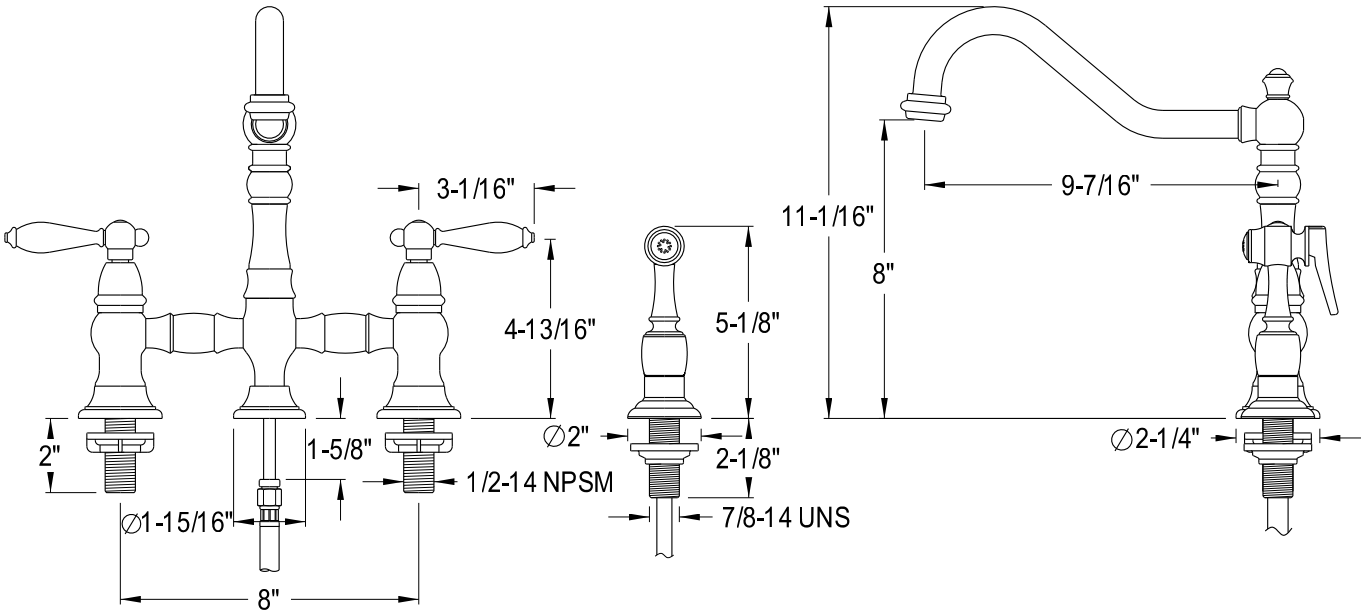

Overall Dimensions:

Length:	8”
Height:	11 1/16”
Spout Reach:	9 7/16”
Spout Height:	8”

Dimensions of fixture and specification subject to change without notice.
Measurements are approximate & may vary +/- 1/2”