MAGNUS HOME PRODUCTS

32" Marsing Stainless Steel Single-Bowl Undermount Sink

SKU# : 109678

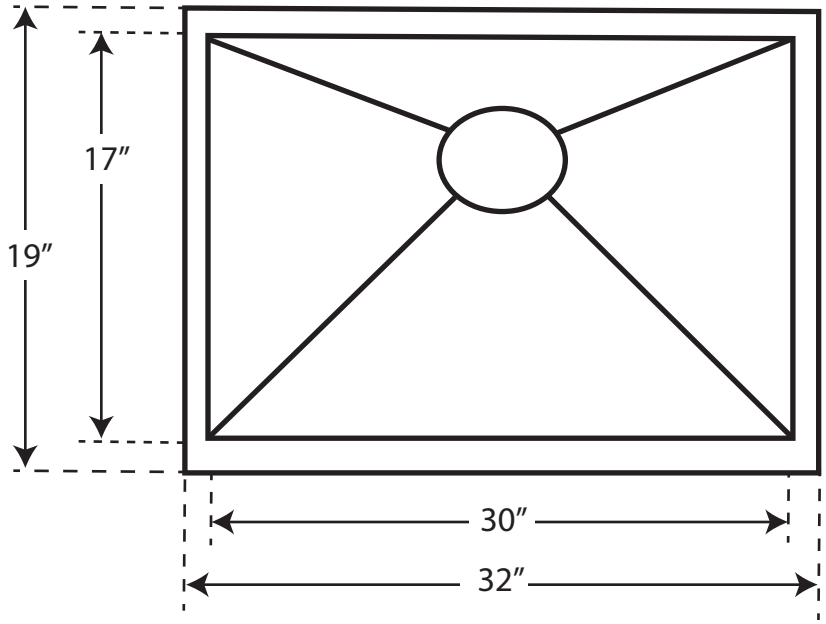

Width: 32”
Depth: 19“
Height: 10”

Interior Bowl Dimensions:

Basin Interior: 30” W x 17” D
Basin Depth: 9-1/2”