MAGNUS HOME PRODUCTS

36" Somerset Vanity for Rectangular Undermount Sink

SKU # 156888

Overall Dimensions:

Length: 36″
Width: 21 1/2″
Height: 34″

Vanity with Optional Top Dimensions:

Length: 37″
Width: 22″
Height: 34″

Overall Sink Dimensions:

Length: 37″
Width: 22″
Sink Depth: 8 3/4″

Product Diagrams / *Diagrammes Produit*

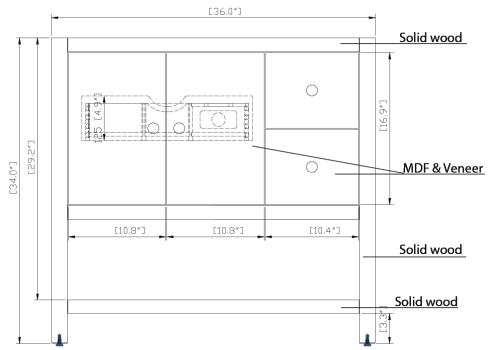

Front / *Devant*

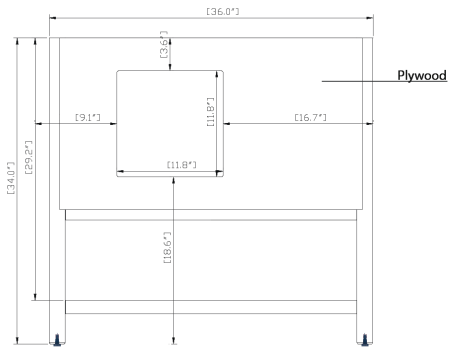

Back / *Derrière*

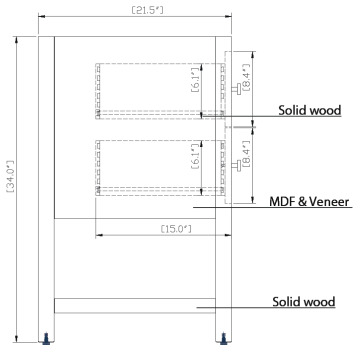

Side / *Côté*

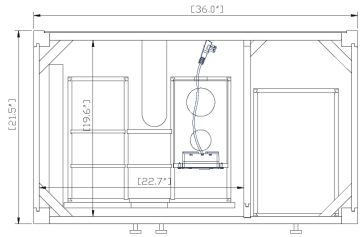

Top / *Haut*