MAGNUS HOME PRODUCTS

52" Ricardo Hammered Copper Range Hood

SKU # **150286**

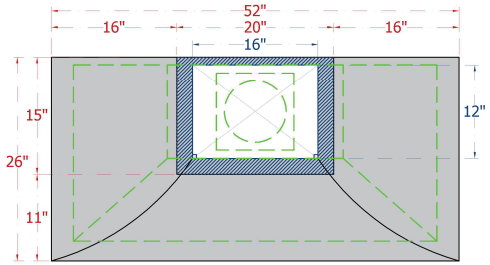

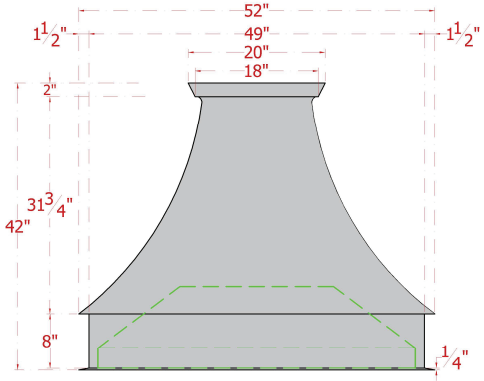

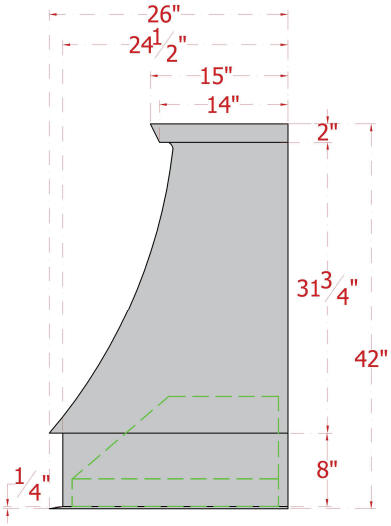

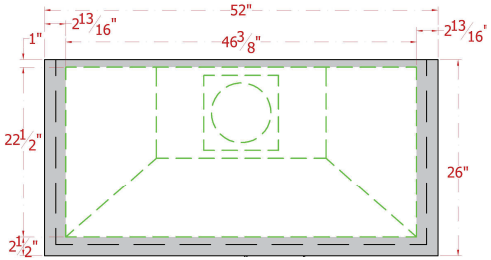

Overall Dimensions:

Length:	52”
Width:	26”
Height:	42”

www.magnushomeproducts.com
PH: 833-482-6828

Dimensions of fixture and specification subject to change without notice.
Measurements are approximate & may vary +/- 1/2”