MAGNUS HOME PRODUCTS

Wexengast Deck-Mount Tub Faucet with Hand Shower

SKU # 142631

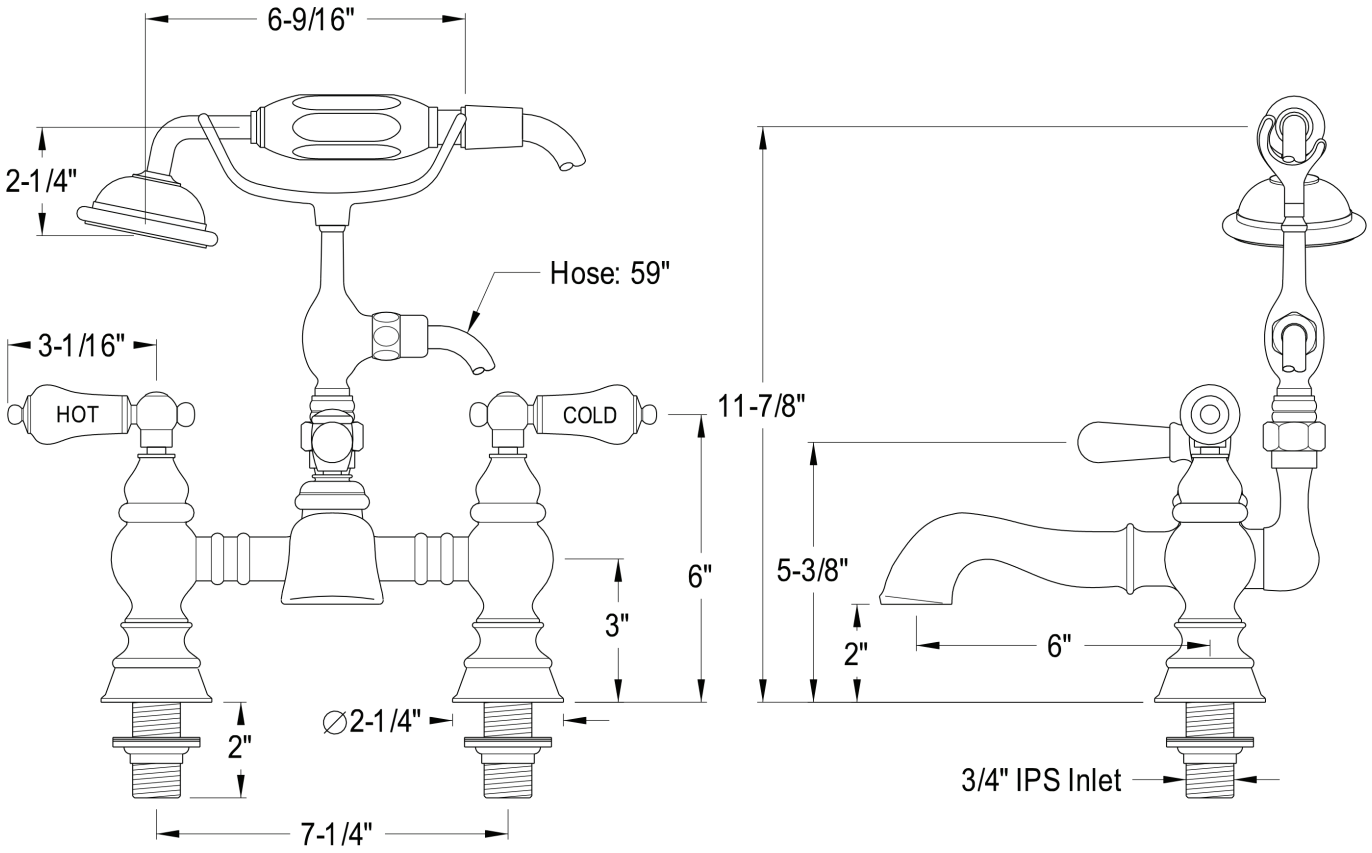

Overall Dimensions:

Length: 7 ¼”
Width: 6”
Height: 11 ⅞"
Spout Reach: 6”