HYPERION Tech

Description and technical features

1.1 MACHINE DESCRIPTION

The machine is a washing centre for vehicles with two independent mobile gantries . This means that the two gantries roll over the vehicle several times to wash and dry it, whereas the vehicle remains stationary for the whole cycle time.

The process includes a first washing phase with rotating brushes, followed by the drying phase during which the water is blown away from the vehicle surface by means of high pressure air flows. The brushes action is supported by the distribution of water and wash chemicals. Before the drying phase some wax is distributed on the vehicle's in order to make the water flow and obtain a polish finishing of the surfaces.

In addition to the phases of washing and drying, the HYPERION TECH unit can carry out other processes that can be generally summed up in: pre-washing phase and polishing phase. A complete washing process is carried out according to the following sequence of operations:

1. pre-washing,
2. washing,
3. polishing
4. drying;

Each phase can be carried out in different ways.

The machine offers multiple choices also in the application of special products which help along the washing and finishing operation such as the pre wash cleaners, the waxes, the polishing products and the osmotic water.

The HYPERION TECH units are equipped with options such as:

- systems for the distribution of hot/cold pre wash cleaner, inclinable for the front and rear of the vehicle.
- Systems for the distribution of active foam, white and Multicolor®.
- pre washing system with side and top high pressure water arches following the vehicle's contour

and nozzles that can be oriented to clean the front and rear parts.

- pre washing system with side and top medium pressure water arches following the vehicle's contour and nozzles that can be oriented to clean front and rear parts.

The two mobile units are called "washing gantry" and "drying gantry". The first one is equipped with the brushes and the water and foam delivery system.

The second one is equipped with the drying fans, the high pressure water system, the nozzles for the pre wash cleaner, wax, hot wax, sonax, and with other specific groups such as the wheel wash brushes WheelMaster.

Using the two separate and independent gantries, a partial overlapping of the brush wash and the drying operation can be obtained when needed. Another advantage is that the wheel wash (when the group is installed) can be carried out without stopping the brush wash. These specific features of the double gantry washing unit allow an increase of productivity of about 20-30%, compared to single gantry machines.

The innovations of HYPERION TECH

Another outstanding feature of HYPERION TECH is the possibility to memorise the vehicle's profile. This is done by a continuous control of the top brush or the top drying nozzle position throughout the first run of the cycle. The system will automatically choose which group to memorise, depending on which gantry will start working first in the selected wash cycle.

The memorisation of the vehicle's profile allows an increase of the gantries speed, ensuring the same quality standard.

With the drying gantry it is possible, for example, repeat a partial or total drying run without dramatically increasing the cycle time. One of the fundamental features of HYPERION TECH, on top of the quality and speed of the different operations, is the possibility to carry out these operations in the same run, for example:

- Side high pressure and WheelMaster® together with the brush wash.
- Multicolor® active foam together with the brush wash (see picture at the side).
- Waxing together with the drying.
- Osmosis water distribution together with the drying.

These features allow to shorten the cycle time, with a considerable increase of the unit capacity.

1.2 MAIN COMPONENTS

A. Drying gantry
B. Washing gantry
1. Running tracks
2. Support frame of the cable and pipes energy supply chain. Electrical box to connect the power supply and the external units
3. Gantry column containing the electrical cabinet
4. Column containing the hydraulic equipment and the wash chemical cans
5. Splash guards (no. 2)

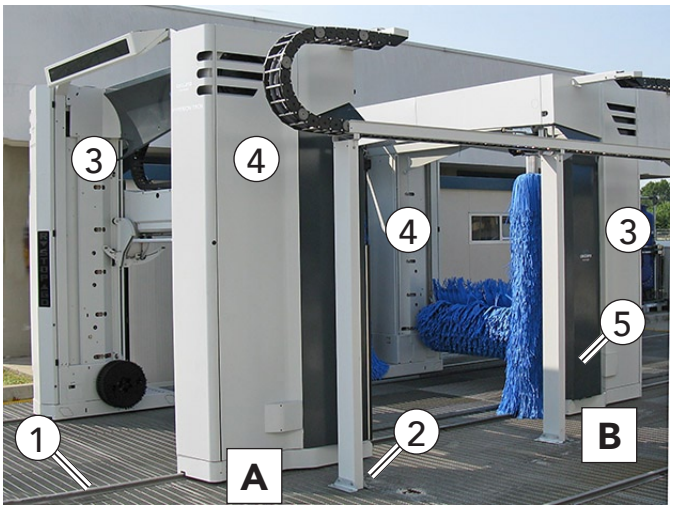

6. Digital text display (option).
7. Top drying nozzle with up and down movement.
8. Top brush equipped with up and down movement.
9. Side brushes (no. 2) with cross movement.
10. Signalisation and positioning device.
11. Wheel wash device (option).

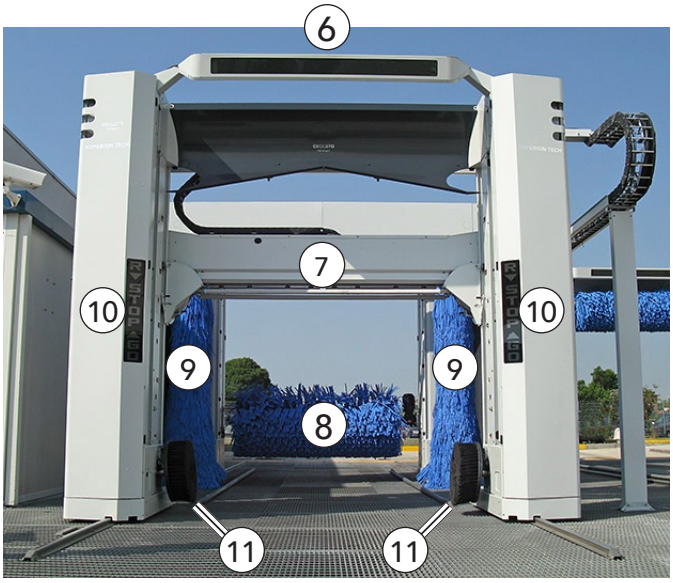

1.3 DETAILS OF THE MACHINE

1.3.1 GANTRY

Frame

The unit steel frame is completely hot dip galvanized and painted with polyurethane epoxy powder that polymerize at high temperatures. The external frame bolts are made in stainless steel AISI 304.

Gantry movement

The gantries move on sliding rails with high mechanical resistance. The rails are equipped with safety devices to avoid derailment and capsizing of the gantries. The standard rails are made of hot dip galvanized steel; they are also available in stainless steel AISI 304.

The gantries wheels are driven through a direct coupling system and the shafts are assembled on standard bearings. The worm screw reduction gears are lubricated for life.

The driving motors are fitted with an electronic speed control (INVERTER device), thus ensuring soft starts and stops. The gantry speed can be programmed according to the washing operation.

1.3.2 BRUSHES GROUP

A wide range of brushes with different performances and prices is available in the market. The washing unit HYPERION TECH has been designed to be used with any type of brush material, requiring only some small changes of the control parameters (see UniOP manual).

Apart from the common features of colour and shape, the brushes differ mainly for their washing effectiveness, the possible marks on the vehicles surface and the lifetime; in the following chart these features are summed up and each brush type is evaluated with a score from 1 to 10.

	Washing perform-ance	Shades absence	Micro marks ab-sence	Polishing perform-ance	Time (washing)
Polyethylene wire	9	10	5	4	~ 35000
Expanded polyethylene stripes	6	7	10	8	~ 30000
Textile stripes	10	7	10	10	~ 28000

The figures of the chart are approximate and can change according to the characteristics of the chemical products used and the supply water, the type of vehicles washed and of course the overall conditions of the washing unit.

Side brushes

Opening movement through electrical motor gear, with sliding trolleys moving on special profile steel guides (1). Gearing belt drive. The travel of the trolleys is controlled through inductive sensors.

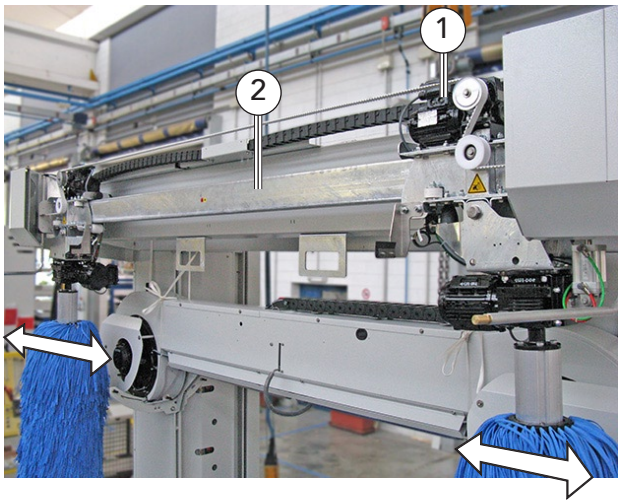

Each brush is equipped with a pneumatic device (2) controlling its vertical or inclined positioning, in order to optimize the washing process on every vehicle's shape.

Possibility to carry out crossed and asymmetric overlapping wash both on the front and on the rear of the vehicle.

Control of maximum brush inclination in the four directions through inductive sensors.

The washing pressure is controlled monitoring the absorbed power of the rotation motors.

Safety device to avoid the bristles to get entangled with tow bars or other protuberances of the vehicle.

Electronic "soft start" device.

Top brush

Up and down movement through electrical motor controlled by inverter and belt transmission.

The travel is controlled through inductive sensors with reading of the position through encoder.

The movements and the washing pressure are controlled by the Smart Shape system.

Electronic "soft start" device.

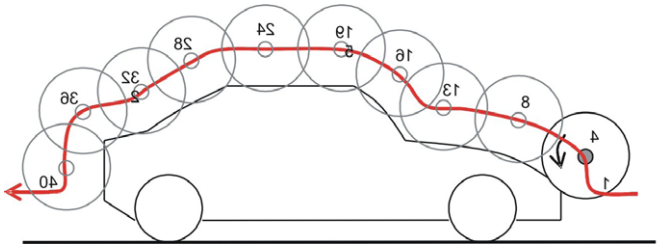

1.3.3 DRYING GROUP

Two fans of 3 kW each for the top blower. The top blower follows the contour of the vehicle and the air jet is directed at the front and rear of the vehicle.

Two fans of 4 kW each for the side blowers.

Fans with 1400 rev/min: low noise

The up and down movements of the top blower are controlled by inverter and belt transmission. The picture shows how the drying cycle is carried out at the same time with the brush wash.

1.3.4 HYDRAULIC CIRCUIT

The machine is equipped with a two-way water supply circuit, one for the water from aqueduct (clean), the other one for the recycled water. The supply pressure is controlled by flow switches; if the pressure falls below a specific level, the machine is set in emergency state.

The unit is equipped with a set of arches and nozzles for the distribution of water and chemical products .

These groups have multiple functions on the HYPERION TECH unit, according to the different phases of the washing cycle.

1.3.4.1 Drying gantry

1. Pre wash chemical nozzles (option).
2. Cold wax, hot wax (option) or osmotic water (option) delivery nozzles.
3. High pressure water nozzles (option).
4. Nozzles for delivering "SONAX"(optional).

5. Foam delivery nozzles (white or multicolor).

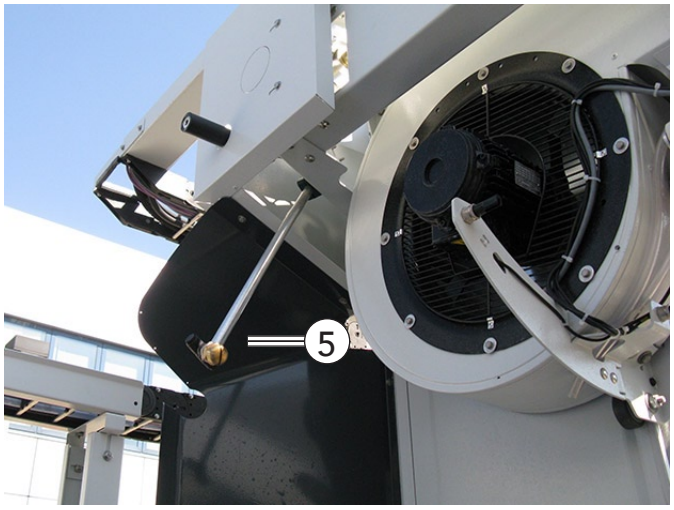

1.3.4.2 Washing gantry

1. Side brushes water nozzles.

2. Top brush water nozzles.

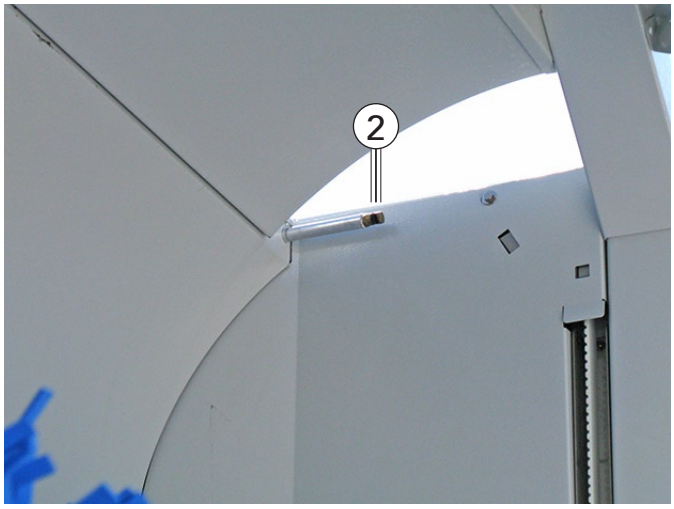

3. Standard shampoo nozzles.
4. Wax delivery nozzles.

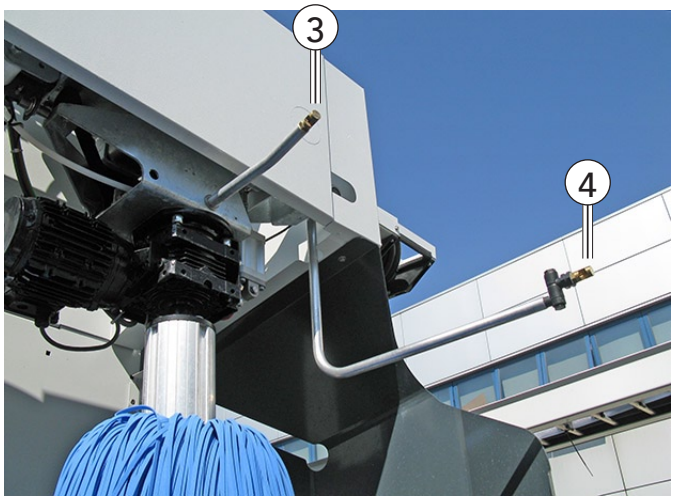

1.3.4.3 Control components

The right-hand column of the drying gantry (A) and the left-hand column of the drying gantry (B) contain all the control components of the relevant hydraulic circuits and the cans of the chemical products which are mixed with water through dosing pumps. It is possible to install, as an option, the product cans and their dosing pumps in an external room.

The hydraulic circuit is designed to operate both with recycled water and water from aqueduct (clean). The user can choose to use both connections or to connect the whole system to the fresh water supply. Upon request, the supply lines can be equipped with flow meters in order to measure the water consumption.

Fresh water is normally used for the waxes and for the pre wash chemicals, while for the other operations recycled water can be used.

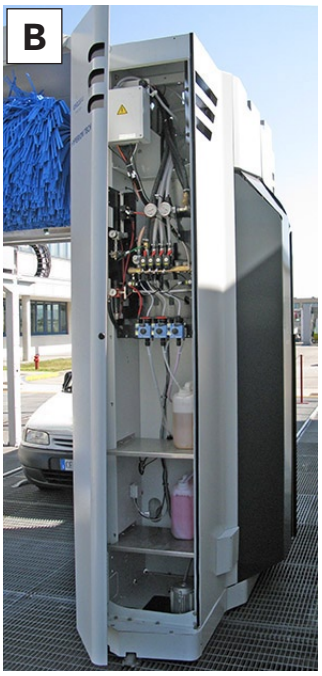

1.3.4.4 Boiler (option)

The hydraulic circuit can be very easily equipped with an electric boiler also after the machine has been delivered and installed. The electric boiler will heat the water used by the application of the pre wash chemicals and of the waxes

1.3.4.5 Osmotic water (option)

The osmotic water is produced by a separate unit which can be also purchased separately or be available on the site. If the unit is supplied by the Manufacturer, it is provided with the relevant use and maintenance manual. The osmotic water is delivered through the hot wax nozzles.

1.3.4.6 Frost protection

The machine standard equipment includes the cocks for the manual discharge of the water arches. An optional kit for the automatic discharge is available as an option. The device will be activated by a function of the operator's panel.

1.3.5 WHEELS WASHER (OPTION)

The unit can be equipped with wheel wash brushes in order to wash the wheels with top results.

Each wheel wash group is equipped with pneumatic cylinder to push out the brush and with brush rotation motor.

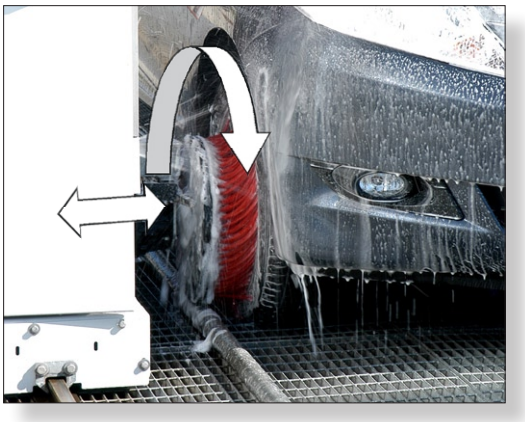

The group can be equipped with a nozzle to deliver shampoo through the brush (1) or with an external nozzle (2) to deliver specific wheel rims cleaning product.

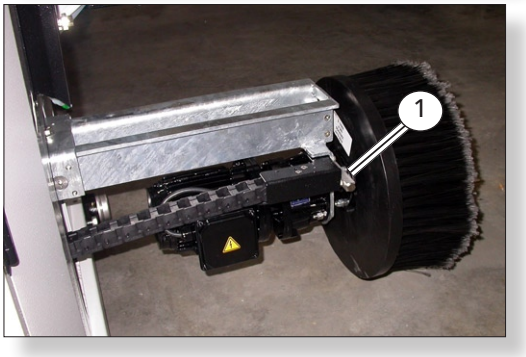

If the vehicle's profile was not yet memorised, the wheel wash brushes will be controlled by the photocell (3).

1.3.6 PRE-WASHING DEVICES (OPTIONS)

1.3.6.1 Units with high or medium pressure – Pre wash chemicals

The machine can be equipped with a washing circuit for high or medium pressure, the first one to be used as possible washing alternative to the mechanical action of the brushes.

In both cases the circuit includes two vertical arches which are fitted to the gantry columns and one horizontal arch, which is fitted to the top drying blower and can therefore follow the vehicle's contour.

While the gantry slides on the rails, the approach of the top nozzles to the vehicle's contour is controlled through a system of photocells.

The vertical and horizontal arches are fed through separate hydraulic circuits.

The pre wash chemical is delivered mixed with water before the washing, using the same circuits of the high or medium pressure system.

The horizontal arch, thanks to a pneumatic device, can be tilted up to a given angle.

This feature enables the machine to direct the water jets to the front or the rear part of the vehicle, which could otherwise not be reached.

The up and down movement system of the horizontal arch (top dryer) is the same as for the top brush, with belt transmission and inverter.

1.3.7 "WHEEL MASTER" WHEEL WASHING DEVICE

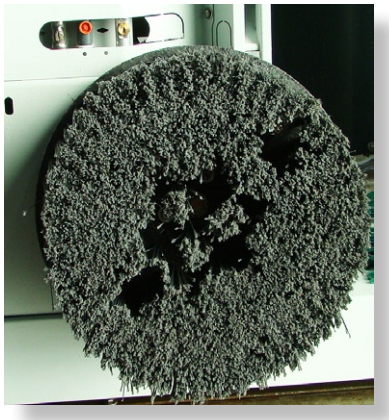

This device consists of wheel washing brushes combined with high-pressure jets of water and detergent, and washes both the wheels (with detergent, high pressure and/or brush) and the sides of the vehicle (with detergent and/or high pressure).

If this device is not installed, a high-pressure side nozzle is present.

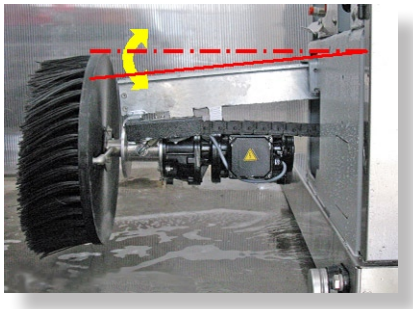

The device is provided with adjustable-angle telescopic guides optimized to aim the brush towards the centre of the wheel (adjustment depends on the size of the wheel and on the slant of centre-sloping floors).

This device also allows one to adjust the angle of the brush for using the jets on the wheels and sides of the vehicle.

When the wheel wash system is open and the side brush is in use, the product is ejected through the horizontal jets and the wheels are washed at high pressure.

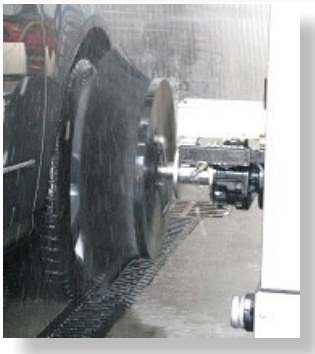

The wheel wash has to be in physical contact with the wheels (with the side brushes and top jets) in order to clean them.

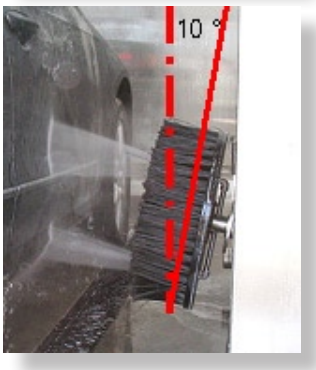

When the wheel wash is open and the brush is at an angle, the product is ejected through the inclined jets and the sides are washed at high pressure.

1.3.8 UNDERCHASSIS WASH (OPTION)

The system to wash the underchassis of the vehicles works with medium pressure water. It includes two rows of oscillating nozzles and it is divided in two sections to adjust to the different lengths of the vehicles.

1.3.9 POLISHING (OPTION)

The polishing products are generally distributed on the surfaces after the drying phase. According to the type, they may be mixed with air or water. In the first case, a specific supply circuit is used, while in the second case the machine uses the wax nozzles system. The product application is followed by the brushing cycle.

The pictures on the side show the circuit for the application of the "Sonax" product which is mixed with air. The nozzles (1) placed in the cross beam of the drying gantry cover the top parts of the vehicle while the ones above the wheel washing groups (2) cover the side surfaces.

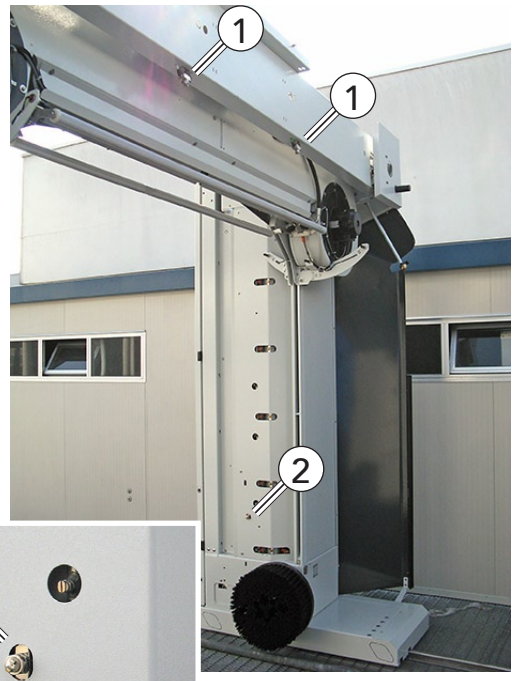

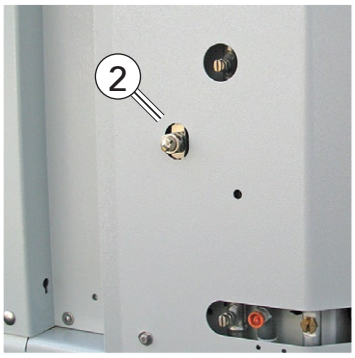

1.3.10 OPTIONAL SPECIAL PRODUCTS

1.3.10.1 Additional shampoo ("mosquito" product)

With the HYPERION TECH unit it is possible to add to the brushes washing water a special shampoo to remove insects traces. It is possible to have washing programs with or without this product.

1.3.10.2 Additional pre wash chemical ("insector" product)

With the HYPERION TECH unit it is possible to use a special pre wash chemical to remove insects traces, as an alternative to the standard pre wash cleaner. "Insector" product is distributed in a separate phase.

It is thus possible to have washing programs with or without this product.

1.3.11 WARNING SIGNS

1.3.11.1 Electroluminescent display

The warning system consists of an electroluminescent display located on the entrance side of each of the two columns that gives the following information.

GO (Green colour) = vehicle forward movement

R (Yellow colour) = vehicle backward movement

STOP (Red colour) = vehicle stop

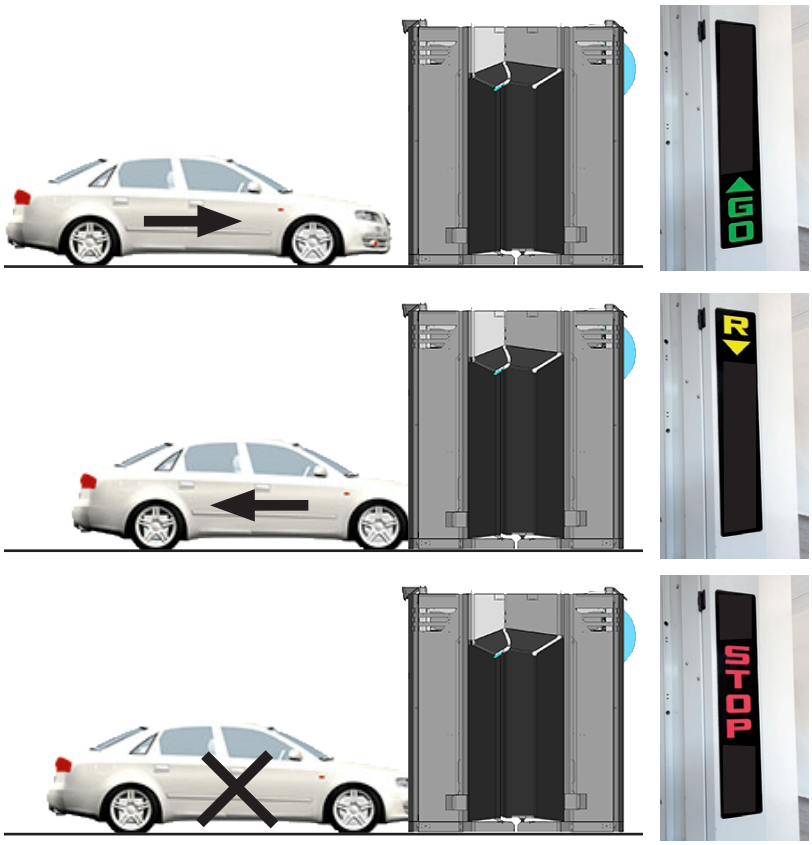

Activation of the display depends on that of the two photocells positioned at an angle which detect the presence of the vehicle in the bay.

1.3.11.2 Buzzer

The machine is equipped with a sound alarm to indicate:

- start of the washing cycle
- end of the washing cycle
- re-positioning of the gantry
- beginning of the phase of automatic frost protection

The buzzer (1) is installed inside the left hand column of the wash gantry, in the upper part.

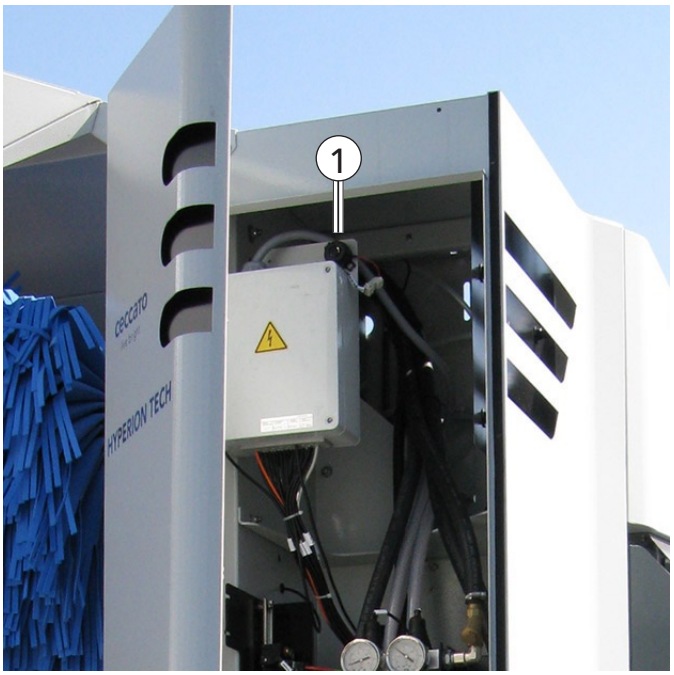

1.3.11.3 Digital text display

These devices can be installed on the top of the system, both in the vehicle entrance side (A) and in the exit side (B), and represent a very effective means to supply information to the car wash user. They consist of a programmable white led panel that can visualize texts in a dynamic way, with horizontal or vertical movements, with different graphical effects. The information can include: instructions for the positioning of the vehicle, information about the wash phase, alarm messages, machine state messages, date, time, programmable advertising messages, etc.

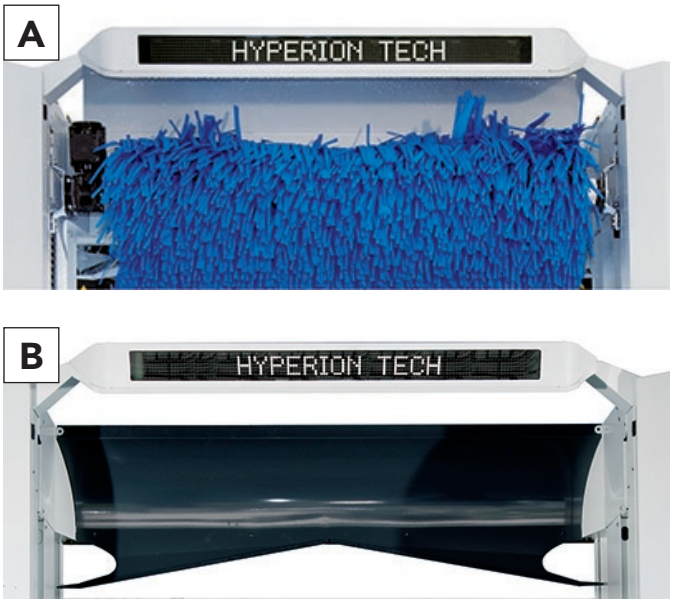

1.3.12 CONTROL DEVICES

1.3.12.1 Control panel

The standard control board of the machine, shown in the picture on the side, is installed on top of a column anchored to the floor, outside the dangerous area.

At the side of this column it is possible to place another support post equipped with the payment system.

The panel is divided in two parts:

1. Operator panel
2. Electromechanical controls and signals.

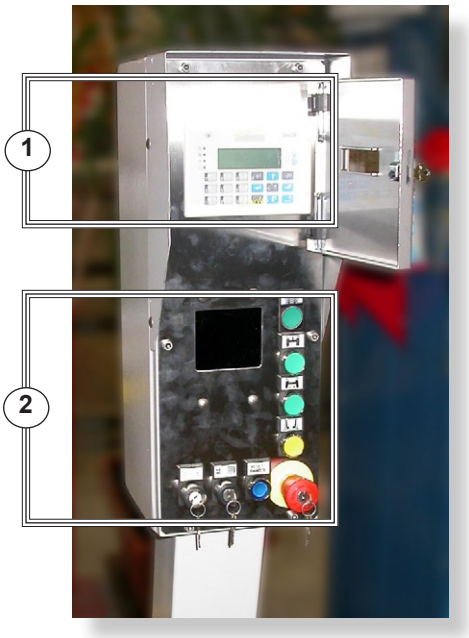

1.3.12.2 Operator's panel

Operator panel with soft-touch keyboard and back lighted LCD display.

Following functions and controls are possible from the operator's panel:

- Information about the state of the machine, the current wash cycle, the alarms.
- Selection of the wash cycle.
- Customization of the programs
- Visualisation of stastistical data.

The access to the system parameters is limited by two-level passwords.

Further information is given in the enclosed relevant programming manual.

1.3.13 SUPERVISION AND CONTROL DEVICES

1.3.13.1 Telecontrol system

The telecontrol system also allows remote data processing and can be connected either through a GPRS or ADSL network, providing real-time information on the status of the unit and allowing immediate action in case of malfunctions.

The system allows to:

- manage 6 USER LEVELS with independent settings
- send text messages (SMS) or emails containing alarm warnings, cycle counter data or unit data
- receive requests to send data by SMS
- manage the ALARM LOG.
- view WEB PAGES for unit control and management
- view CASH and REVENUE status
- view the wash bays via multiple webcams

Once recognized by the system through a password, any enabled user can send an encoded SMS requesting the sending of:

- total and daily cycle counter data
- unit status
- alarms and events report

Enabled users can also request the sending of a emails with the following information:

- total and daily cycle counter data
- alarm log ed events report

By connecting via Web, authorized users can:

- manage a multi-user connection
- view the list and status of the units
- view a synoptic diagram showing the status of the units
- send and reply via SMS or EMAIL to messages from other users (even for units not connected through GPRS)
- send SMS messages in any of the languages available
- Configure the alarm and control settings
- Look after the system's filters over time
- Export data
- Analyse statistics concerning alarms, events and revenue
- Compare and contrast analyses of different systems
- Create reports and graphs

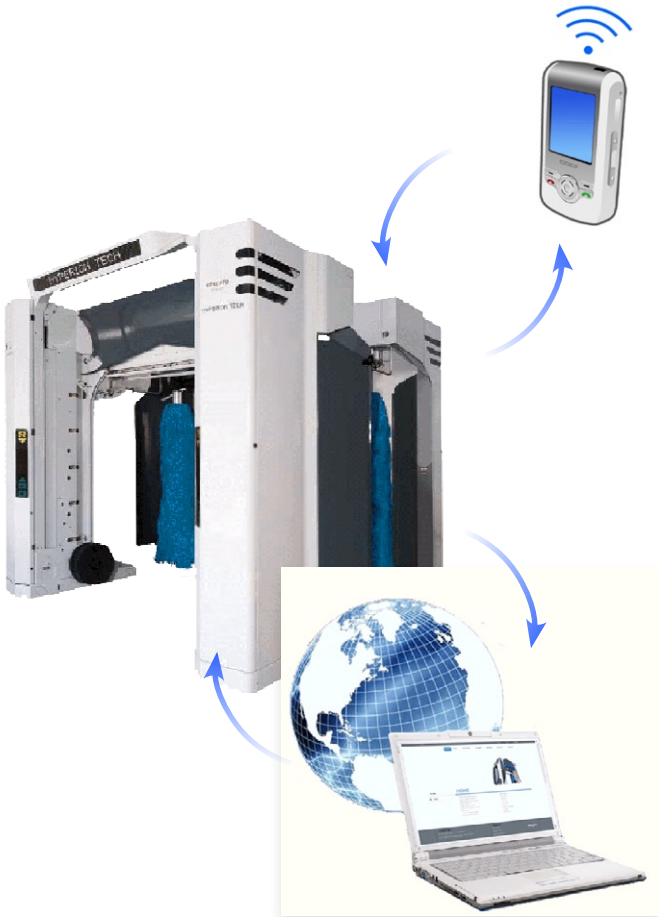

1.3.14 SELF SERVICE CONTROL DEVICES (optional)

1.3.14.1 SIMPLY COIN AIR coin accepter

Coin accepter, ideal for outdoor use with small to medium sized systems.

1.3.14.2 AUTOCOIN coin/banknote accepter

Coin/banknote accepter for outdoor use with medium to large sized systems.

1.3.14.3 SIMPLYSTART activator for car wash

Automatic payment machine able to give change and change banknotes, or change and dispense coins for additional services.

It can be configured with 4 to 6 washing programs and has an emergency stop and system repositioning and reset buttons.

1.3.14.4 PITPOINT PLUS activator for car wash

Automatic payment machine that can be configured with 6 separate washing programs.

1.3.14.5 PSD CODAX

The device includes a main unit (A) with printer, placed in the kiosk and a remote unit (B) usually placed close to the washing machine. After payment , a ticket with a random code is issued by the main unit. The user goes then to the remote unit and digits the number on the keyboard to start the washing cycle.

1.4 LIST OF THE OPTIONS

Supervision and control devices

- Remote diagnostic through SMS
- Remote diagnostic through WEB/IFSF

Self-service payment systems

- Banknotes, coins and key reader
- PSD Codax

Vehicle's positioning devices

(Standard: front display on drying gantry).

- Rear display on washing gantry
- Start board
- Wheel driver

High and medium pressure pre washing

- Total high pressure in one run
- Total high pressure in two runs
- Side high pressure in one run
- Side and top medium pressure
- WheelMaster, can be linked to any of the above options.

Washing groups

- Wheel wash brushes
- Underchassis wash

Special treatments

- Side pre wash chemicals
- Directional top pre wash arch (front-rear)
- Programmable multicolour foam (MFS)
- Active foam
- Foam wax
- Additional wax
- Foam Polish polishing system
- Sonax polishing system
- Wheel rims cleaner
- Hot pre wash chemical - wax
- Rinsing with osmotic water

Brushes

(Standard brushes in polyethylene).

- Foam touch
- Fabric

Auxiliary device

- Boiler
- Osmotic water
- Automatic frost protection
- Doors control

Claddings and brushes colours

(Metal frame std. colour: white RAL 7035 with RAL7016 splash guards and blue bristles).

- Other configurations and colours upon request.

Other options

- Coloured side guards
- Centralised manual lubrication

1.5 CONVENTIONS

Gantry forward movement

FORWARD movement means that the gantry is in front of the vehicle and moves forward to get close to it .

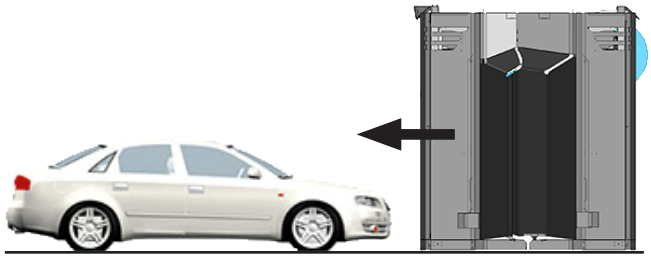

Gantry backward movement

BACKWARD movement means that the gantry is in front of the vehicle and moves backward to get away from it.

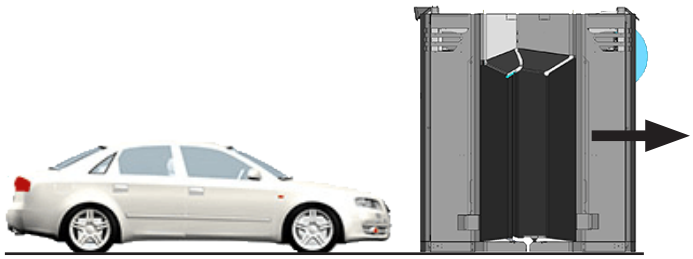

Left and right side

The definitions "right" and "left" refer to the front view of the machine, the vehicles' entry side

A. Left side.

B. Right side.

Top brush rotation

The direction of rotation of the top brush can be either "climbing" or "counter-rotating" in relation to the gantry movement.

> To identify the correct rotation direction of the brushes, use the manual functions on the operator panel. With the forward rotation controls, the direction of rotation of the brushes must be unfavourable. Consult the operator panel manual accompanying the plant.

"Climbing" rotation

See figure C

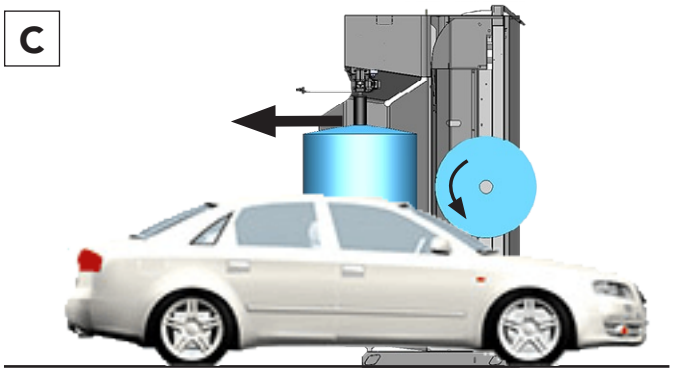

"Counter-rotating"

See figure D

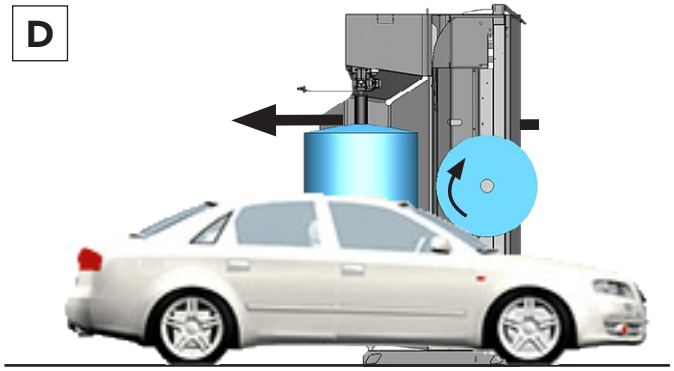

Side brushes rotation direction

"Climbing" rotation

See figure E

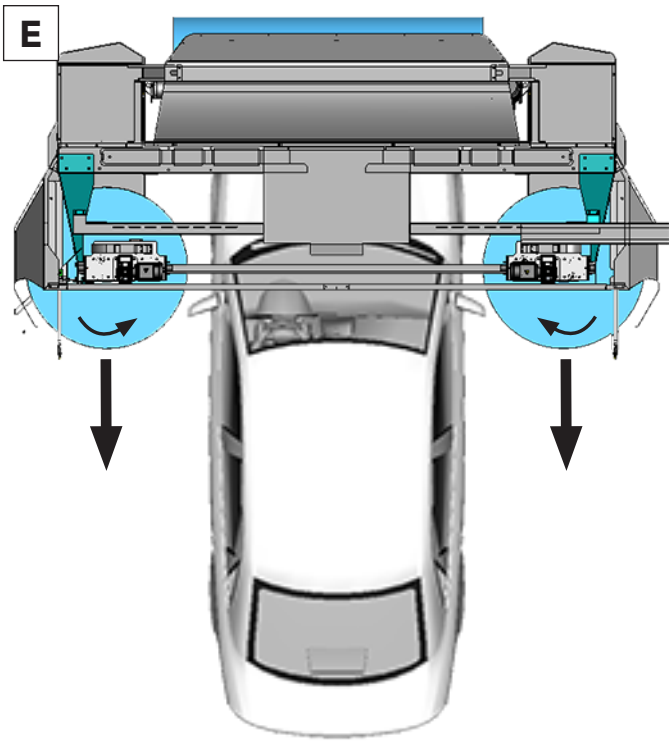

"Counter-rotating"

See figure F

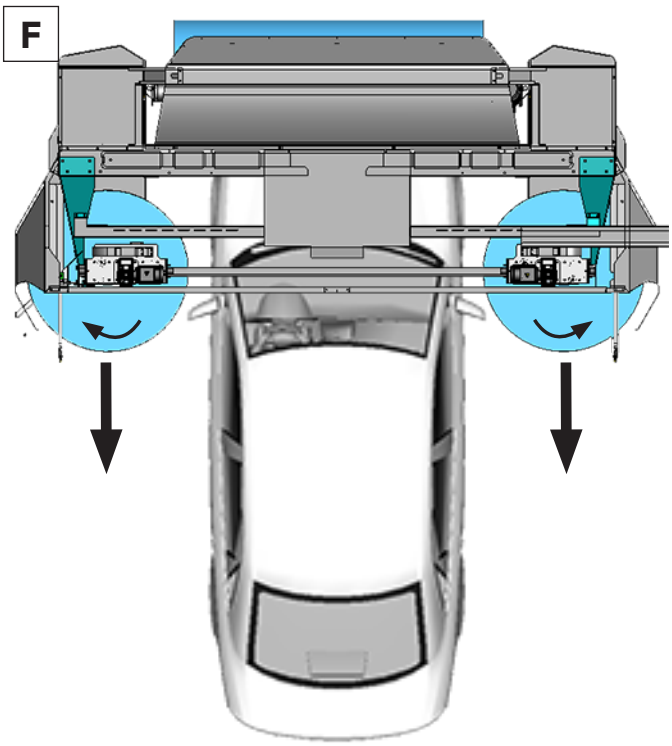

1.6 TECHNICAL FEATURES

1.6.1 CONNECTIONS

Recycled water..... G 3/4"
Clean water ..... G 1/2"
Water pressure.....3-4 bar
Compressed air..... G 1/4"
Air pressure .....7-8 bar
Osmotic water..... G 1/2"

Max power absorption (*)	with boiler	kW (Hp)	28 (37,5)
	without boiler	kW (Hp)	22 (29,5)
Max power required (*)	with boiler	kW (Hp)	25 (33,5)
	without boiler	kW (Hp)	19 (25,5)
Power supply		V	See plate
Frequency		Hz	See plate

(*)Power absorbed by the light panel, pumps and other is not included.

Please see following table to calculate the total installed power of a given configuration

Pumps power	**kW (Hp)**
Recycled water supply pump	1,5 / 3 / 4 (2 / 4 / 5,5)
Fresh water supply pump	1,5 / 3 / 4 (2 / 4 / 5,5)
WheelMaster feeding pump	5,5 / 7,5 (7,5 / 10)
No. 1, 2 or 3 high pressure feeding pumps	7,5 (10)
Medium pressure feeding pump	5,5 / 7,5 (7,5 / 10)
Underchassis feeding pump	5,5 (7,5)

1.6.2 REQUIRED ENVIRONMENTAL CONDITIONS FOR MACHINE EXPLOTATION

The washing unit can be installed:

- on forecourts, in the open air;
- indoor, in suitable wash bays;
- in service stations, at a distance of minimum 10 m (32ft) from gasoline / diesel oil / gas filling pumps and from the fuel tanks filling pits; in any case well outside of the dangerous zones classified under the norms in force;
- at a distance of at least 10 m from residences or other buildings used for commercial activities, offices or business;
- allowed operation temperatures: +1/+40° C;
- relative humidity: 80 % maximum;
- maximum height above sea level: 1500 m, in case of higher altitudes please contact Ceccato technical assistance;
- absence of corrosive, combustible or explosive dust;
- absence of corrosive and combustible liquids and aerosol products.

Special contractual agreements are necessary if above conditions cannot be met.

1.6.3 QUALITY OF THE WATER

The correct operation of the washing equipment is granted only if the water used for the washing process is in compliance with the following characteristics:

FRESH WATER

Parameter		
pH		6-8
Hardness	°F	<30
Total suspended solids	mg/l	<10
TDS (total salinity)	mg/l	<3000
Turbidity max	NTU	1
Free chlorine	mg/l	-
Iron	mg/l	<2

RECYCLED WATER

Depending on the system, it is possible to guarantee 70-80% of water reuse.

Parameter		
pH		6-8
Hardness	°F	<30
Total suspended solids	mg/l	<15
COD	mg/l	<200
Total hydrocarbons	mg/l	<5
Total surfactants	mg/l	<2

If above parameters are not met, the Manufacturer is at your disposal to study and propose the most suitable water treatment solution to obtain the required water quality.

!

- It is not possible to use recycled water with the features reported in table to supply the softened and osmosis unit.
- No large material must be found in the infeed water (stones, bags, leaves) which could damage the system's feed and the high-pressure pumps.
- For the discharge of the waste water of the vehicle wash operation into the city sewer, follow the local regulations.

1.6.4 WASH CHEMICALS CONSUMPTION

When using Ceccato wash chemicals, the dosing pumps shall be adjusted in order to obtain a consumption per cycle as shown in the diagram on the side. The consumption data are referred to the wash of vehicles with average length of 4,5 m and to an ambient temperature of 10-12 °C. The wash chemical delivery rate shall be reduced if the temperature is higher.

Ceccato Chemicals	Consumption per cycle (ml)
Pre-Wash Cleaner	20-30
Wheel Rim Cleaner	20-30
Foam Shampoo	10-20
Brush Shampoo	5
Multicolor Yellow PRO	20-30
Multicolor Fucsia PRO	20-30
Multicolor Blue PRO	20-30
Wax Plus	20-25
Polishing Wax	30-35

1.6.5 PROPERTIES OF THE CHEMICAL PRODUCTS

Product	Ceccato Code	pH of concentrated product	Material of gaskets on dosing pump	Characteristics
Pre wash cleaner	832198	11-12	EPDM	It must not attack aluminium, similar alloys and paintwork, even in the hot season.
Brush shampoo	832234	3-4	EPDM	It must be easy to rinse off and the degree of foam must be controllable. It is important the shampoo can be mixed with the other detergents used for the washing process and can help protect against limescale.
Foam shampoo	832233	3.5-4.5	EPDM	It must have a highly foaming effect, for use in small quantities (20 g/cycle). It must not leave whiteish residue and the pH must be slightly acid to remove grime. The foam shampoo must contain an agent that can prevent the redepositing of dirt, and well lubricate the brushes to reduce friction between these and the surfaces of the vehicle.
Multicolor	832249 832250 832251	11.5-13.5	EPDM	It must be a true pre-washing cycle, not only a neutral PH foaming, with an anti-static cleaning action, easy to rinse and it must not leave any mark. It also must be compatible with nanostructured polymer based wax to be used during the subsequent phase. If incompatible waxes are used, residuals or deposits may form in the pipes.
Rim detergent	832235	13-14	EPDM	This must contain a suitable amount of inhibitor so as not to attack the parts in contact with the spray circuit or damage the bodywork of the vehicle in the event of contact. It must not be acid, otherwise it could attack and damage the spraying system and concrete bay.
Polish	832184	9-10	EPDM	It must not solidify or build up in layers in its container or in the nozzles when sprayed out.
Sonax	832207	7-8	EPDM	Exclusive supplier: Sonax
"Cera plus" wax	832236	4-5	VITON	It must not contain silicone or insoluble polymers that can form residue in the pipes. In general, the wax must not contain any greasy substances or mineral oils that could "soil" the brushes of the washing system and smear the windows of the vehicle.
"Super cera" wax	832237	4-5	VITON	It must not contain silicone or insoluble polymers that can form residue in the pipes. In general, the wax must not contain any greasy substances or mineral oils that could "soil" the brushes of the washing system and smear the windows of the vehicle.

1.6.6 MAXIMUM VEHICLE SIZE

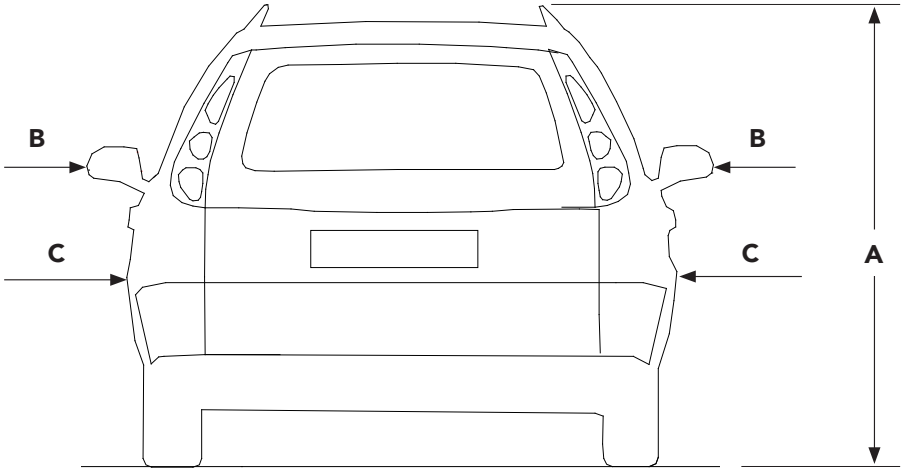

		HYPERION TECH		
		240	**260**	**295**
Washing useful heights mm (in)	A	2350 (92”)	2600 (102”)	2950 (116”)
Max. passage width mm (in)	B	2360 (92”) / 2660 (104”)**		
Washing useful width * mm (in)	C***	2100 (82”) / 2400 (94”) **		

* bodywork without ledges (mirrors, etc.)
** HYPERION TECH LARGE
*** Vehicle with normal shape and correctly positioned in the middle of the wash bay

1.6.7 WHEEL WASH UNIT OPERATION LIMITS

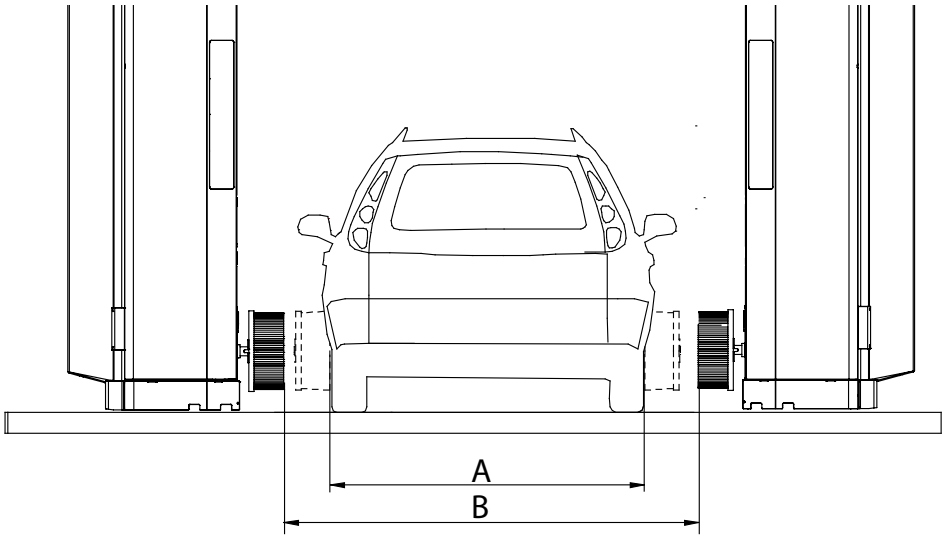

	HYPERION TECH STD	HYPERION TECH LARGE
(A) Minimum distance between wheels mm (in)	1120 (44”)	1420 (56”)
(B) Max. wheel wash passage width mm (in)	2040 (80”)	2340 (92”)

1.6.8 USEFUL WASHING LENGTH

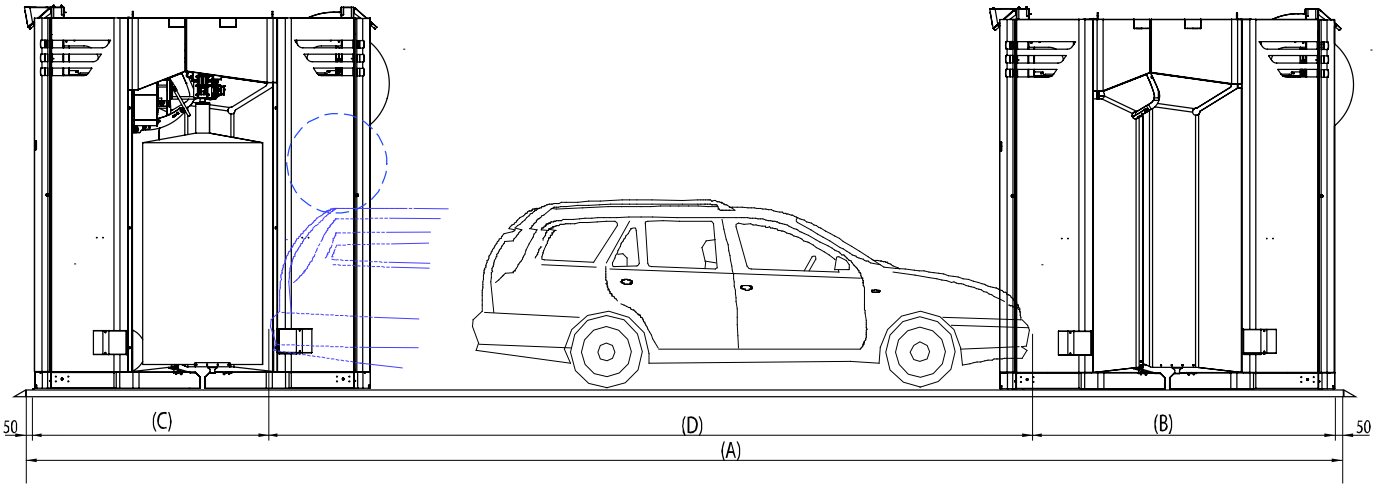

Photocells positioning:

The positioning system with photocells forces the user to place the vehicle with the front part in the exact position, thus optimizing the available space (see drawing).

A. Standard rail length: 10000 mm (33ft)

B. Space needed in front of the vehicle: 2540 mm (8ft 1/4)

C. Space needed behind the vehicle: 1900 mm (6ft 1/4)

D. Maximum vehicle length: 5460 mm (18ft)

!

In case of indoor installation, check the minimum distances from the machine side frames to the walls and the space remaining between the machine and the entry and exit walls/doors when the unit is positioned on both rails limit switches.

Positioning on start board

By installation of the start board positioning system, it is necessary to increase by 50 cm the wash bay length. This because of the vehicles with long engine hood; when vehicles with short engine hood are washed, there will be free space in front of the vehicle.

- Vehicle's max length: 4960 mm (16ft 1/4)

The value is approximate and could change in combination with the length of the front or rear section of the vehicle.

1.6.9 SIZES

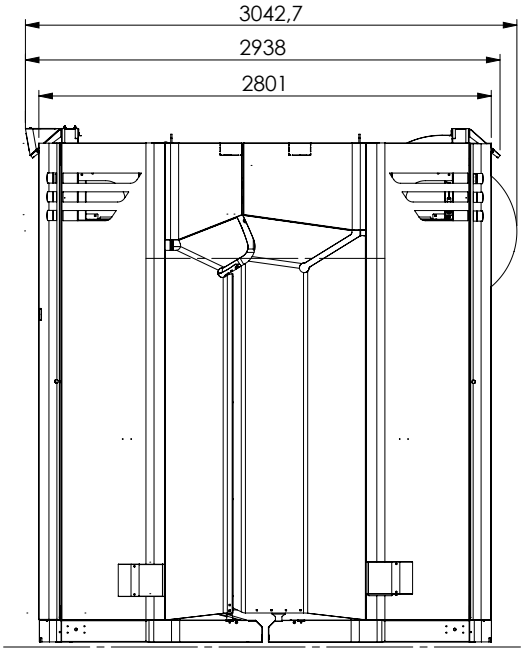

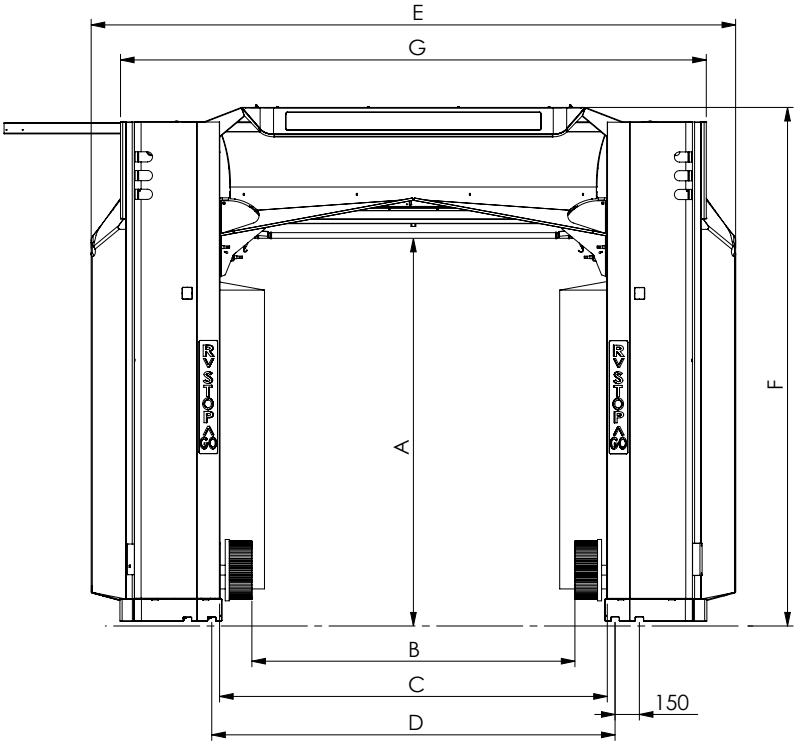

			HYPERION TECH		
			240	**260**	**295**
Total weight	kg	(lb)	2500 (5511 #)	2600 (5732 #)	2700 (5952 #)
Height (A)	mm	(in)	2370 (93”1/4)	2620 (103”1/4)	2970 (116”3/4)
Width (B)	mm	(in)	2000 / 2300 (78”3/4 / 90”1/2 #)		
Width (C)	mm	(in)	2400 / 2700 (94”1/2 / 106”1/4 #)		
Rails distance (D)	mm	(in)	2500 / 2800 (98”1/2 / 110”1/4 #)		
Width (E)	mm	(in)	3990 - 4290 (157” / 168”3/4 #)		
Height (F)	mm	(in)	3215 (126”1/2)	3415 (134”1/2)	3765 (148”1/4)
Width (G)	mm	(in)	3630 - 3930 (143” - 154”3/4#)		

(#) HYPERION TECH LARGE

1.6.10 INDOOR INSTALLATION

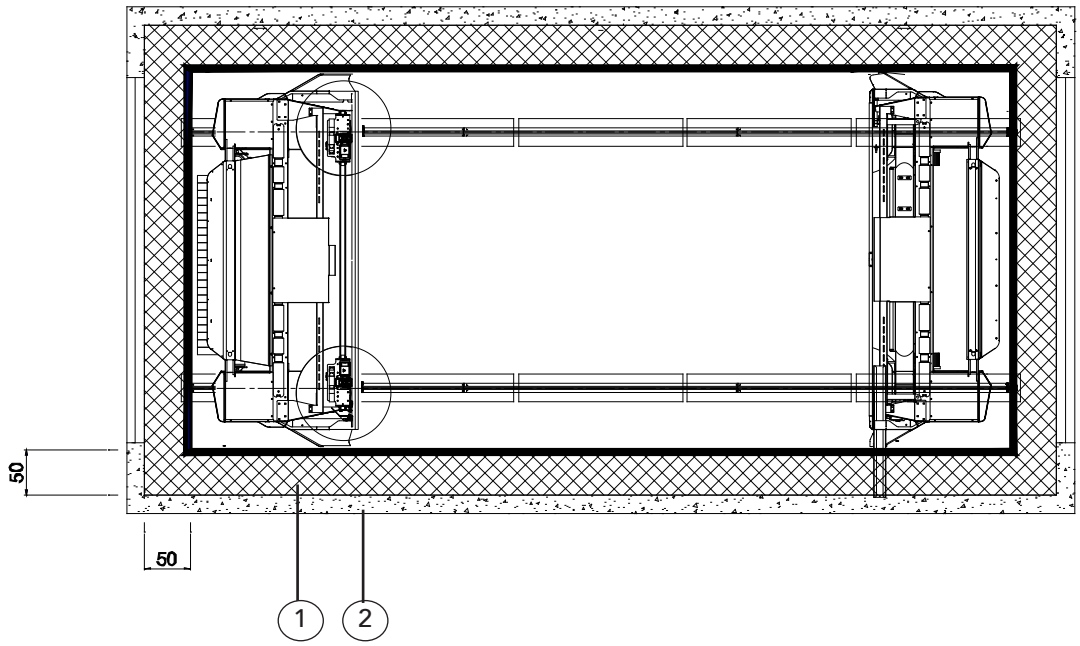

The washing unit HYPERION TECH can be installed in closed bays.

In compliance with the applicable technical norms, if the machine is installed in a closed bay, there shall be at least 50 cm of free space (2) around the perimeter (1) which encloses the working area of the unit.

When the necessary space is restricted, for example by columns, the minimum safety distance must be increased by the size of said obstacles.

If, for any reason, such space is not available, it is compulsory to install specific safety devices , see paragraph 4.2.2.2, chapter 4.

If the safety devices are installed later on, for example after moving the machine to another site, the engineer in charge of the installation shall supply an updated handbook, or add following documents to the existing manual:

- technical cards and drawings;
- commercial components certificates;
- description of system operation;
- analysis of risks.

!

The safety system described above becomes part of the washing unit and therefore must be tested with it.

- As for the dimensions, see the foundation plan of the specific unit.
- Further information on this issue is given in chapter 4.

1.6.11 OPEN AIR INSTALLATION

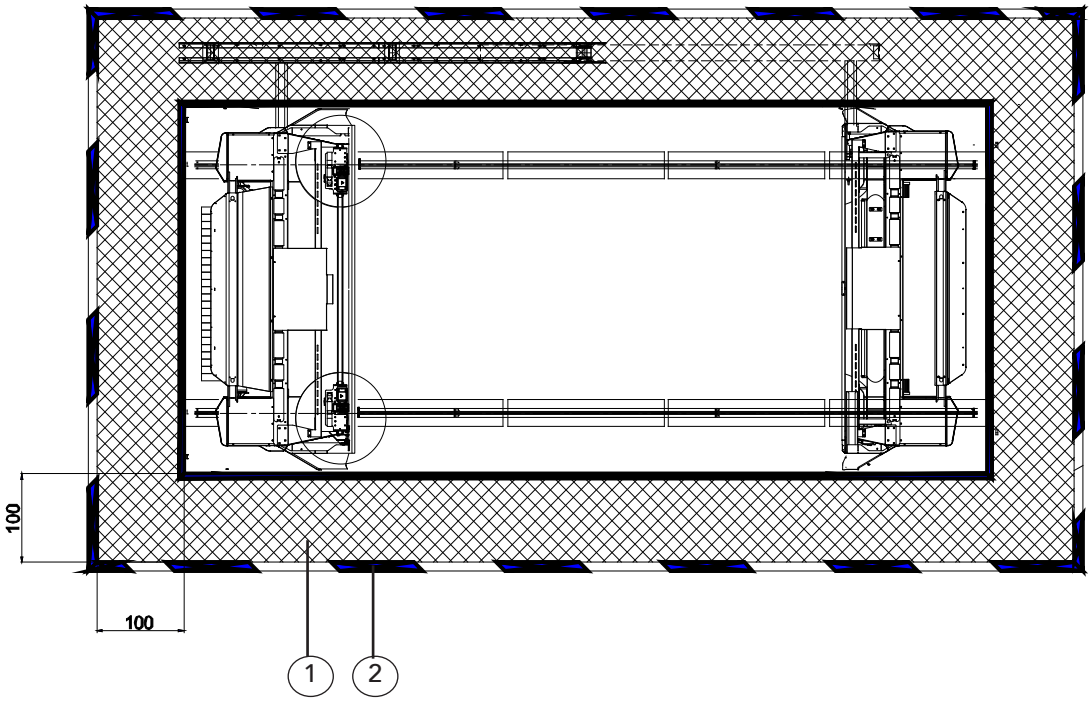

It is necessary to leave at least 100 cm free space (2) around the perimeter (1) which encloses the working area of the unit.

The area should be marked by yellow and black stripes (delivered with the machine) on the floor (3). The stripes shall be fixed to the floor after completing the installation of the machine and before the unit is handed over to the customer.

The information signs dedicated to the operation area must be fixed to suitable support boards that will be placed on the external perimeter of the wash bay in such a way that they can be easily seen by customers (see par. 4.5.3).

!

The installation work can not be considered as completed if the working area has not been marked with the coloured bands and the warning panels are not in place.

Further information on this issue is given in chapter 4.

1.6.12 MIXED INSTALLATIONS - Guidelines

"Mixed" are those open air installations where there are some side and/or front limitations.

In these cases it is necessary to comply with the norms in force for both types of installation; for the open air part it is compulsory to limit the dangerous area with yellow and black stripes, while for the area with side or front obstacles the same safety devices used in the closed bays should be installed.

!

- The above described norms regarding the safety devices to place when the space around the machine is less than 50 cm ((19"3/4), are valid also in case there is only one concerned point in the whole perimeter of the unit's area (for example a column, part of side wall, etc).
- If, after the preliminary checks of the safety conditions of the selected installation area, the safety requirements described in the previous paragraphs are not granted, please do not proceed with the installation of the machine, but get in touch with the Manufacturer's technical department for instructions.

1.6.13 NOISE LEVEL

The noise level (air noise) has been measured with the machine working in compliance with the norms in force. Collection of the noise pressure levels, in free field on reflective plane, was made at distances of 5, 10, 15 and 20 meters on axis with the source and resulted in the levels shown in figure (values in dbA).

The noise level of the machine can be heavily influenced from its configuration and equipment.

!

The User shall inform the site personnel about the danger connected to the noise level and comply with the relevant local norms.

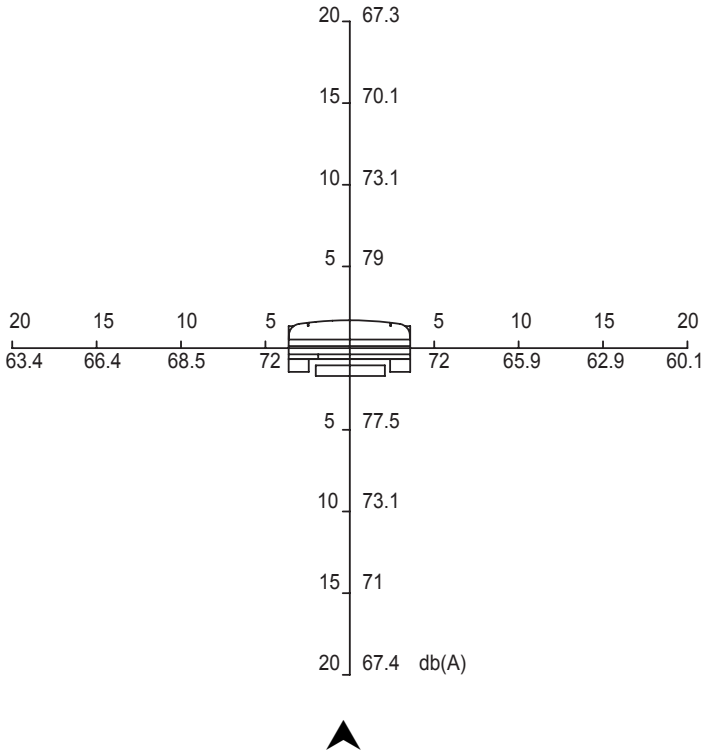

1.7 PRE-ARRANGEMENTS AND SUPPLIES

1.7.1 TO BE PROVIDED BY THE USER

The User is in charge of the following supplies, if not otherwise agreed:

- Preparation of the installation area including possible civil works and/or required ducting.
- Power supplies necessary for the machine operation and their connections in compliance with the local norms.
- Preparation of an efficient earth system and specific connections in compliance with the local norms.
- The supply of the required ancillary hydraulic components, such as pumps, water softeners, etc.)

A detailed hydraulic and pneumatic connection plan is supplied together with this handbook. Please consult it for all technical data and details.

Concerning the electrical connection, please consult the enclosed wiring diagram where you can find following information:

1. number of phases;
2. minimum cables section;
3. installed power;
4. maximum absorbed power;
5. characteristics of the current operated earth leakage circuit breaker to protect the power supply line.

The data of items 1,2,3,4 are written also on the machine identification plate (see paragraph 1.4.2 chapter 1).

1.7.2 MACHINE KEYS

The machine is supplied with following keys:

1. One pair of keys to open the door of the electrical cabinet and the door of the cabinet containing the wash chemical cans on the gantries' columns.

   For shipment reasons, all keys are placed inside the gantries' columns, which are kept closed during transportation by plastic straps.

2. One pair of keys to unlock the switch-on selector of the machine.
3. One pair of keys to lock or unlock the selector switch for the activation of the machine operation in self-service mode.
4. One pair of keys to lock or unlock the emergency stop button on the remote control panel.

All keys supplied with the machine shall be kept in a safe place and accessible only for authorized personnel.

The use of the keys , items 2-3-4, is described in chapter 6, paragraph 6.2

1.8 PROGRAMMES - TIMES – CONSUMPTIONS

In the following table are listed some typical washing programmes, with the relevant cycle times and consumptions, measured on a medium length vehicle.

	Program	runs	Time	Recyded water	Cleanwater	Air	Power	Smoother	Shampoo Foam	Wax	Super wax	Sonax
			min	liters	liters	liters	kW/h	cc	cc	cc	cc	cc
1	Going1,2: Wax Return1,2: Drying + Over-sweep	2	1'30"	-	15	-	0.57	-	-	12	-	-
2	Going1,2: Multicolor + Washing + Wheels washer Return1: Washing + Wax Return2: Drying + Over-sweep	4	2'30"	60	15	5	0.75	-	20	12	-	-
3	Going1,2: Side high pressure + Wheels washer + Robowash + Multicolor + Washing + Overlapping Return2: Washing + Overlapping + Wax Return1: Drying + Over-sweep	4	3'20"	120	15	50	1.35	-	22	12	-	-
4	Going1,2: Multicolor + Wheels washer + Washing + Overlapping Return2: Washing + Overlapping + Wax Return1: Slow drying Going1: Fast drying Return1: Fast drying	6	3'40"	70	15	20	0.80	-	22	12	-	-
5	Going1: Hot smoother + Wheel wash chemical product Return1: Total high pressure + Wheels washer Going1,2: Multicolor + Washing + Overlapping Return2: Washing + Overlapping + Wax Return1: Drying + Over-sweep	6	3'45"	160	25	70	1.80	80	20	18	-	-
6	Going1,2: Multicolor + Wheels washer + Washing + Overlapping Return2: Washing + Overlapping Return1: Drying Going1: Formel Plus Sonax Going2: Sonax Brushing Return2: Sonax Brushing + Wax Return1: Drying + Over-sweep	8	6'30"	120	15	140	1.55	-	26	12	-	100
7	Going1: Hot smoother + Wheel wash chemical product Return1: Total high pressure + Wheel washer Going1,2: Multicolor + Washing + Overlapping Return2: Washing + Overlapping Return1: Drying Going1: Formel Plus Sonax Going2 Sonax Brushing Return2: Sonax Brushing + Wax Return1: Drying + Over-sweep	10	7'20"	160	25	130	1.90	-	26	12	-	100

1.8.1 EXPLANATION OF THE DATA

- The measurements were taken using a standard vehicle with a length of 4,5 metres;
- The chimical products used are the ones indicated by Ceccato (please contact the Sales Department of Ceccato s.p.a.).
- The power consumption data include following pumps:
  - fresh water supply pump, 1.5 kW;
  - recycled water supply pump 1.5 kW;
  - WheelMaster feeding pump, 5.5 kW;
  - side high pressure pump, 7.5 kW ;
  - top high pressure pump, 7.5 kW .