MAGNUS HOME PRODUCTS

Gaho Vitreous China Wall-Mount Bathroom Sink

SKU# 132543

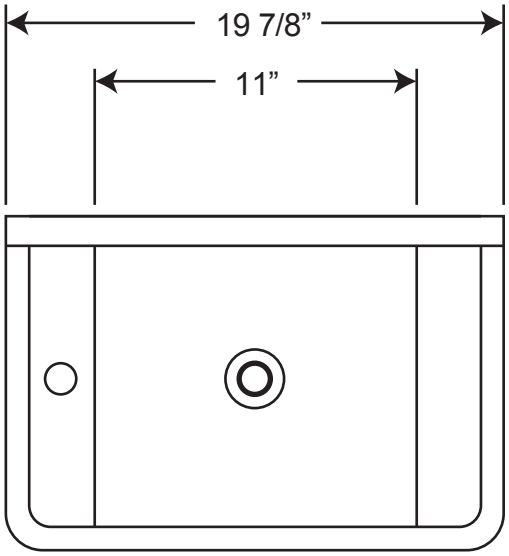

Overall Dimensions:

Length:	19 7/8”
Width:	10 5/8”
Height:	8 1/4”

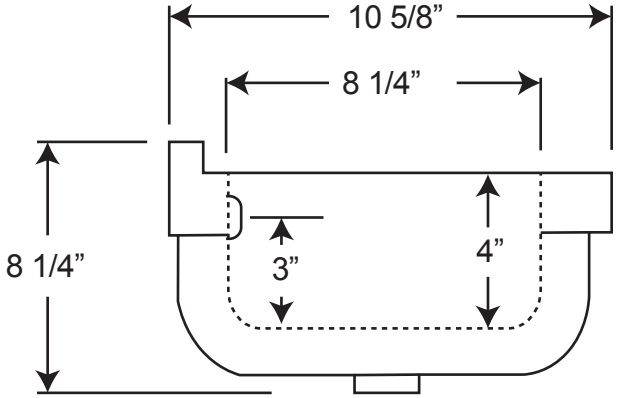

Interior Dimensions:

Length:	11”
Width:	8 1/4”
Basin Depth:	4”
Depth to Overflow:	3”

www.magnushomeproducts.com
PH: 833-482-6828

Dimensions of fixture and specification subject to change without notice.
Measurements are approximate & may vary +/- 1/2”