MAGNUS HOME PRODUCTS

Trigg Vitreous China Wall-Mount Bathroom Sink

SKU# 133244

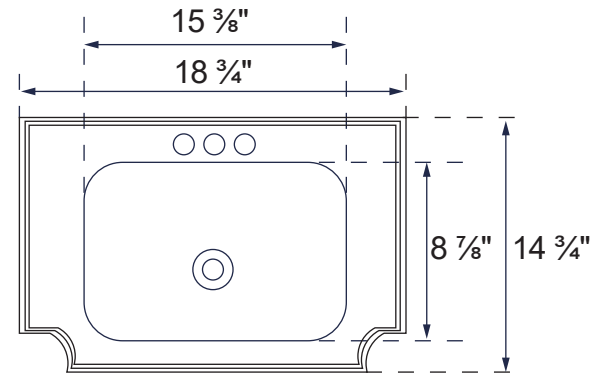

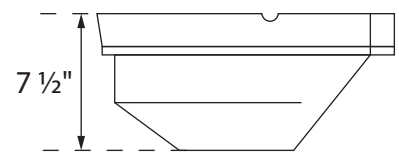

Overall Dimensions:

Length: 18 ¾"
Width: 14 ¾"
Height: 7 ½"

Interior Dimensions:

Length: 15 ⅜"
Width: 8 ⅞"
Basin Depth to Overflow: 4 ⅜"

www.magnushomeproducts.com
PH: 833-482-6828

Dimensions of fixture and specification subject to change without notice.
Measurements are approximate & may vary +/- 1/2”