MAGNUS HOME PRODUCTS

Silvia Centerset Bathroom Faucet **SKU # 139471**

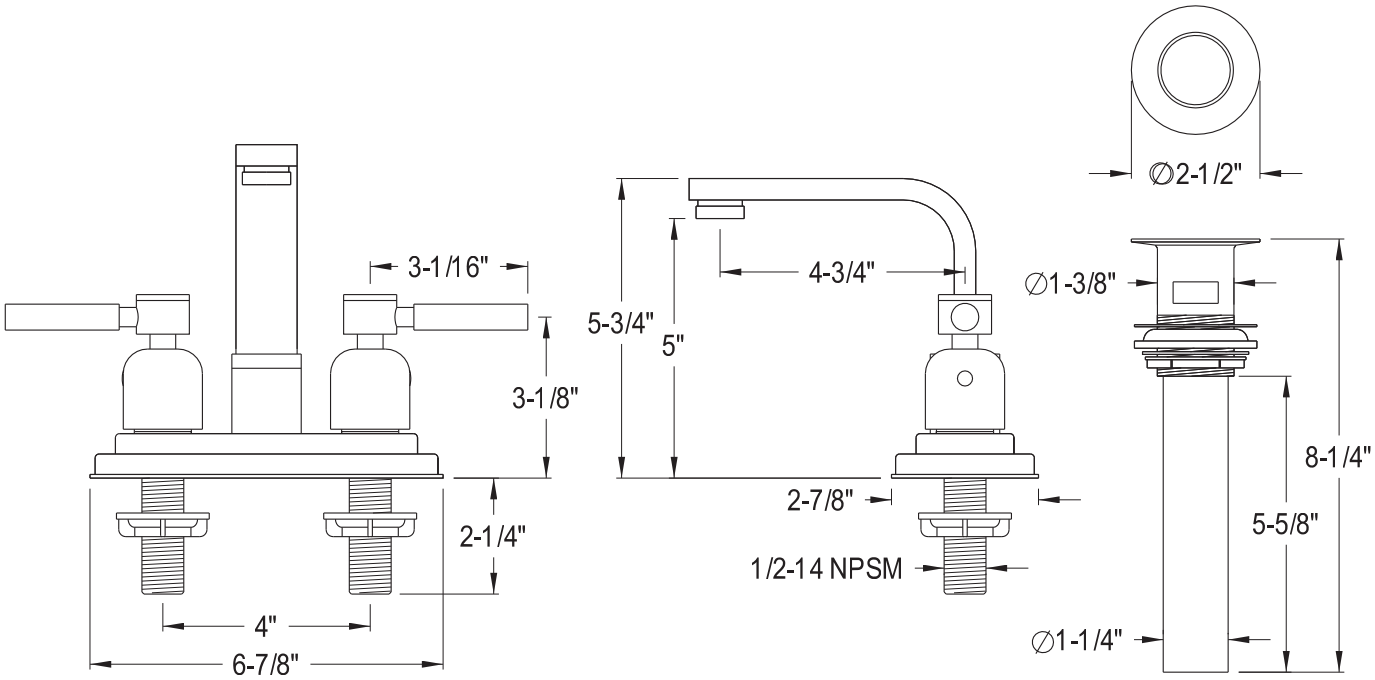

Overall Dimensions:

Length:	10 1/8”
Height:	5 3/4”
Spout Reach:	4 3/4”
Spout Height:	5”

Base Dimensions:

Length:	6 7/8”
Width:	2 7/8”