MAGNUS HOME PRODUCTS

Waxensmith Deck-Mount Tub Faucet

SKU # 142630

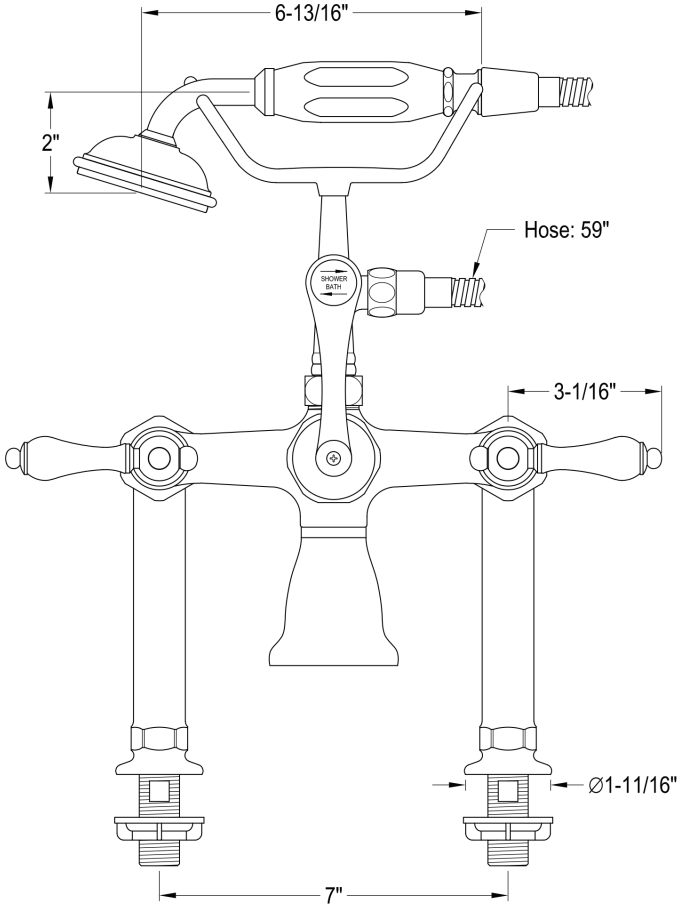

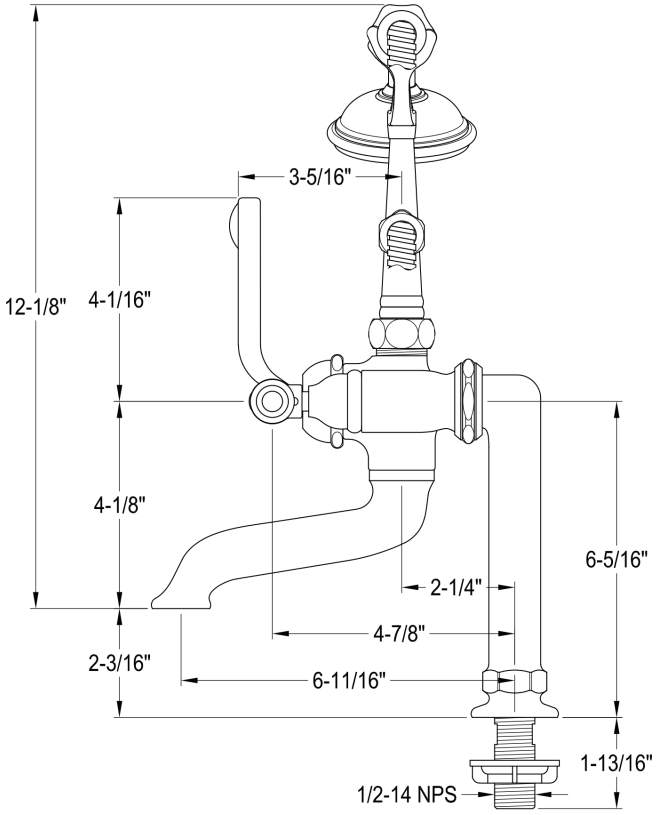

Overall Dimensions:

Length: 11”
Width: 7”
Height: 7"
Spout Reach: 6 ⅔”
Hose Length: 59”