MAGNUS HOME PRODUCTS

52" Miguel Hammered Copper Range Hood

SKU # **150285**

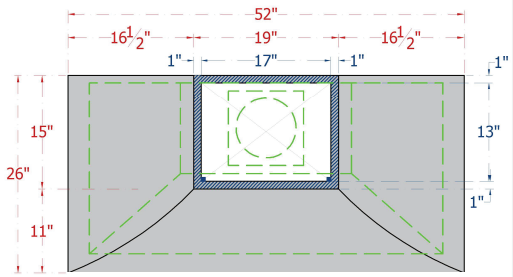

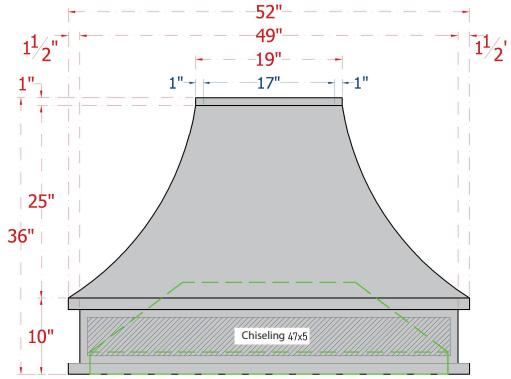

Overall Dimensions:

Length: 52”
Width: 26”
Height: 36”

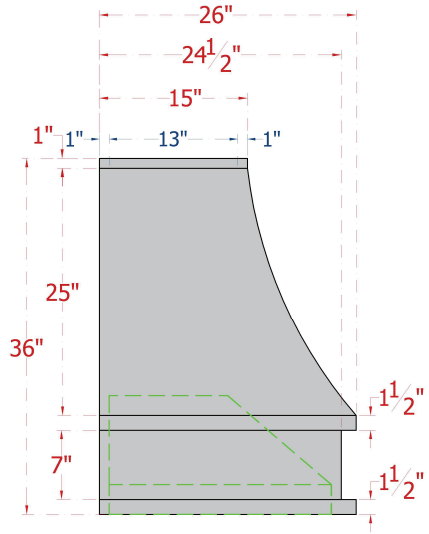

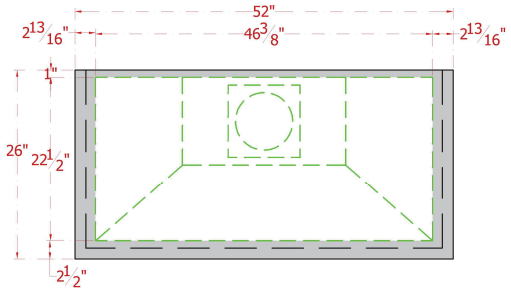

Dimensions of fixture and specification subject to change without notice.
Measurements are approximate & may vary +/- 1/2”