MAGNUS HOME PRODUCTS

Ranker Bridge Kitchen Faucet with Brass Sprayer

SKU # 141142

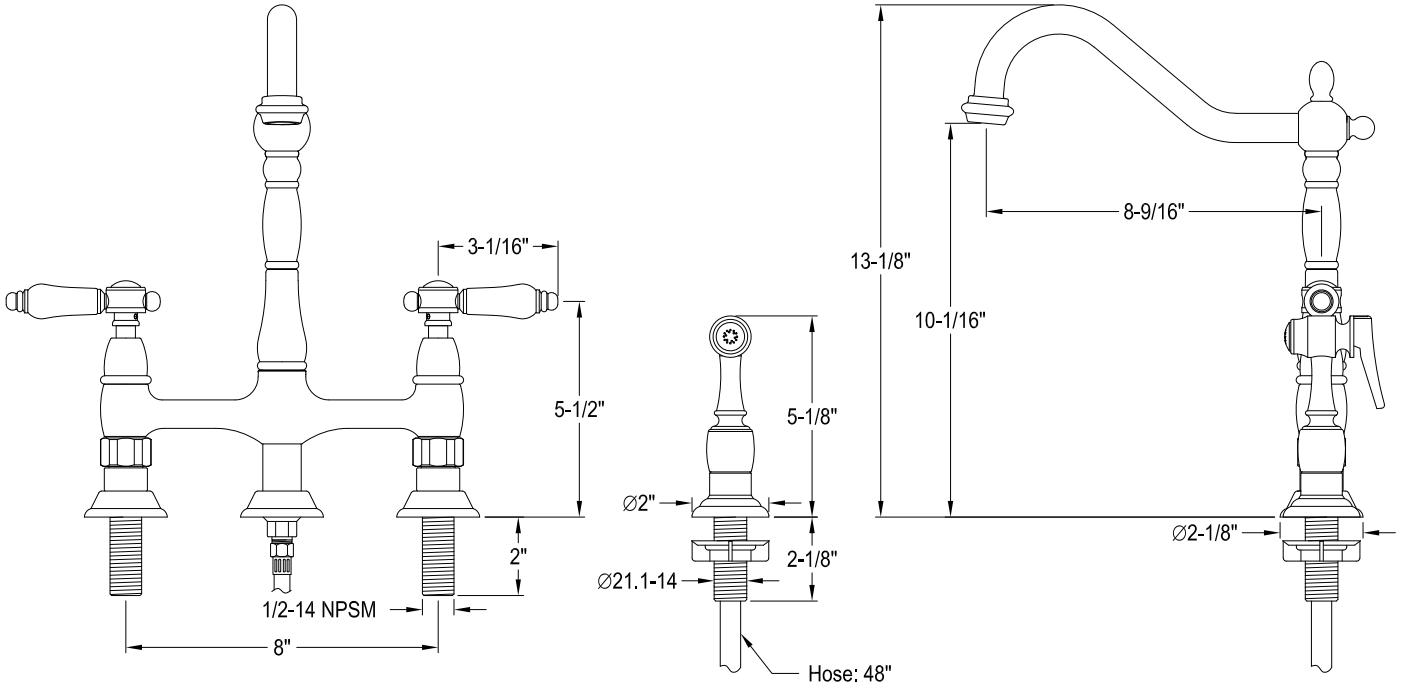

Overall Dimensions:

Length:	8”
Spout Reach:	8-9/16"
Spout Clearance:	10-1/16"
Spout Height:	13-1/8”

Dimensions of fixture and specification subject to change without notice.
Measurements are approximate & may vary +/- 1/2”