MAGNUS HOME PRODUCTS

36” Hadar Smooth Polished Egyptian Cream Marble Double-Bowl Farmhouse Sink

SKU# : 109968

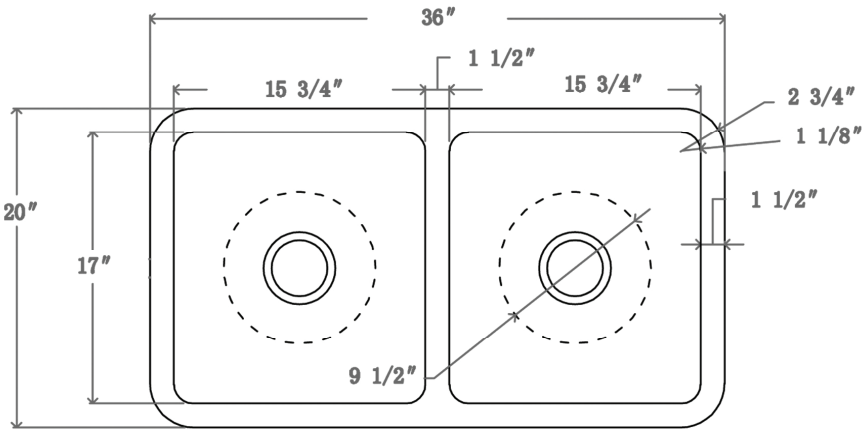

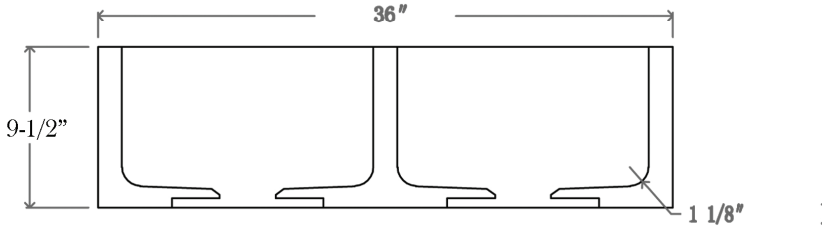

Width: 36”
Depth: 20”
Height: 9-1/2”

Interior Bowl Dimensions:

Each Basin Interior: 15-3/4” W x 17” D
Basin Depth: 8-1/8”