MAGNUS HOME PRODUCTS

43" Raso Vitreous China Console Bathroom Sink with Steel Stand

SKU# : 133226

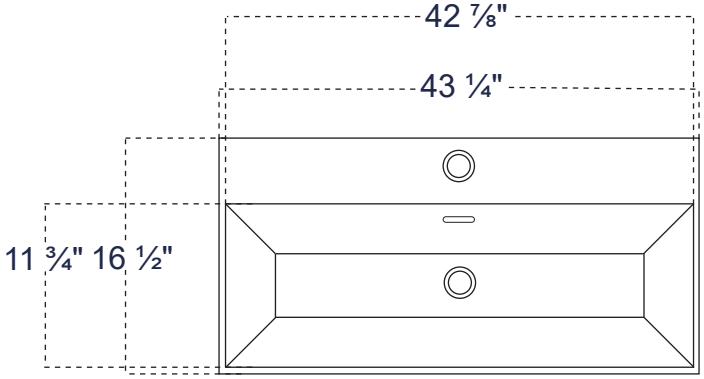

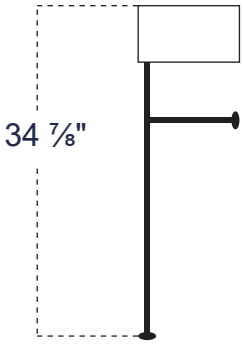

Overall Dimensions:

Width: 16 ½"
Length: 43 ¼"
Height: 34 ⅞"

Interior Dimensions:

Width: 11 ¾"
Length: 42 ⅞"
Basin Depth: 3 ⅛" (2" Depth to Overflow)
1 3/8" Faucet Hole; Pre-Drilled for Single-Hole Faucet Only
Drain Not Included (Accepts Standard 1 1/2" Drain)

www.magnushomeproducts.com
PH: 833-482-6828

Dimensions of fixture and specification subject to change without notice.
Measurements are approximate & may vary +/- 1/2”