MAGNUS HOME PRODUCTS

Uriah Square Cast Concrete Vessel Sink

SKU# : 129628 | 129629 | 129630

Top Dimension: 15-¾" x 15-¾"
Bottom Dimension: 7-¾" x 7- ⅝"

Above counter height: 6"

Interior Dimensions:
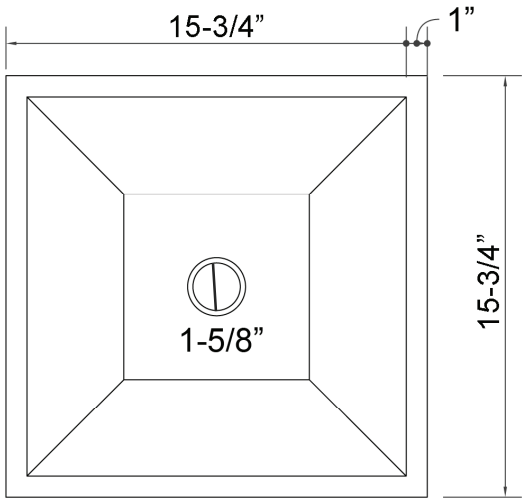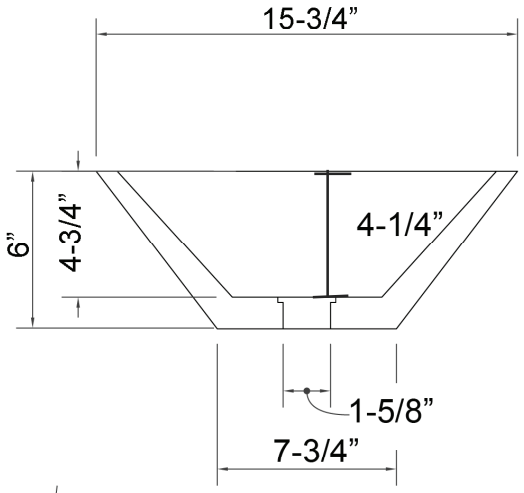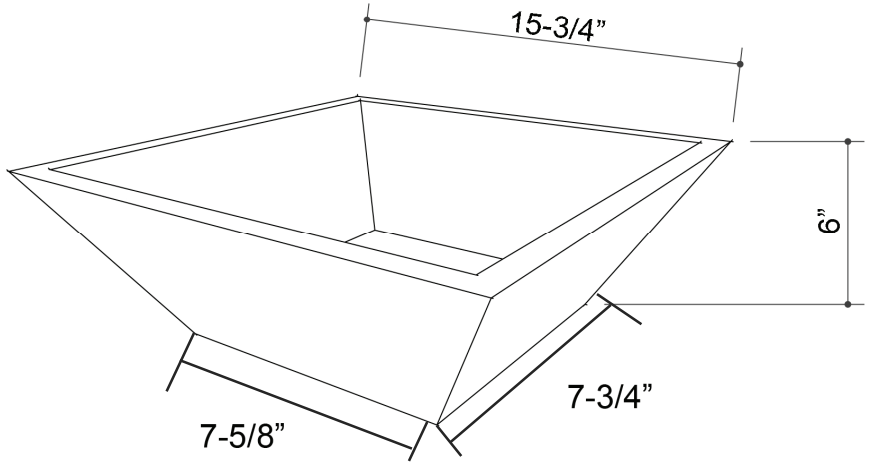
Basin Interior: 14" x14"
Basin Depth: 4-¼"