MAGNUS HOME PRODUCTS

66" Tasten Hammered Copper Double-Ended Tub with Flat Rim

SKU # 142037

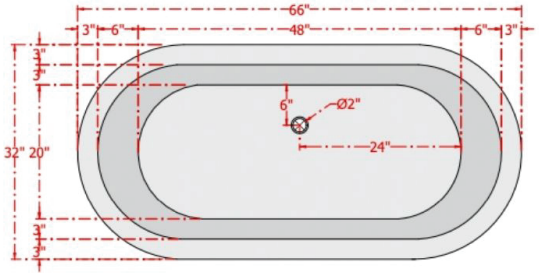

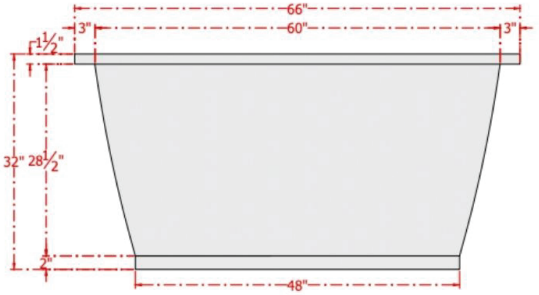

Overall Dimensions:

Length: 66”
Width: 32”
Height: 32”
Gauge: 16”

Interior Dimensions:

Length: 48”
Width: 20”
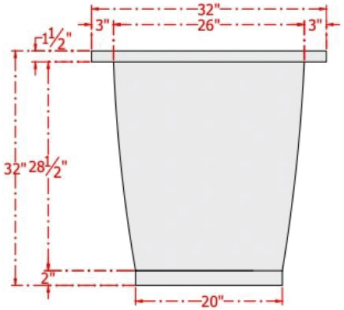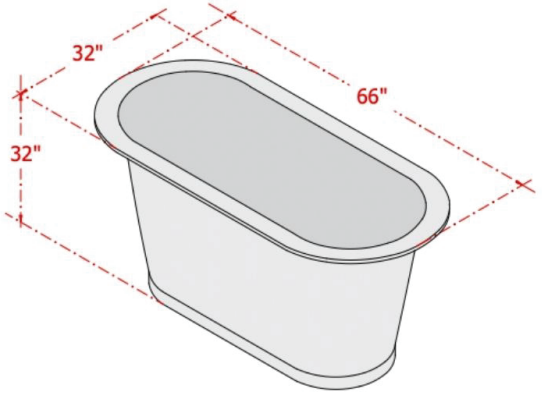
Water Depth: 23 1/2”
Gallon Capacity: 68-Gallon