MAGNUS HOME PRODUCTS

Goodar Vitreous China Wall-Mount Bathroom Sink

SKU# : 111569

faucet not included

Length: 22 3/8"
Width: 16" (Front to Back)
Height: 5" (± 1/2")

Interior Dimensions:
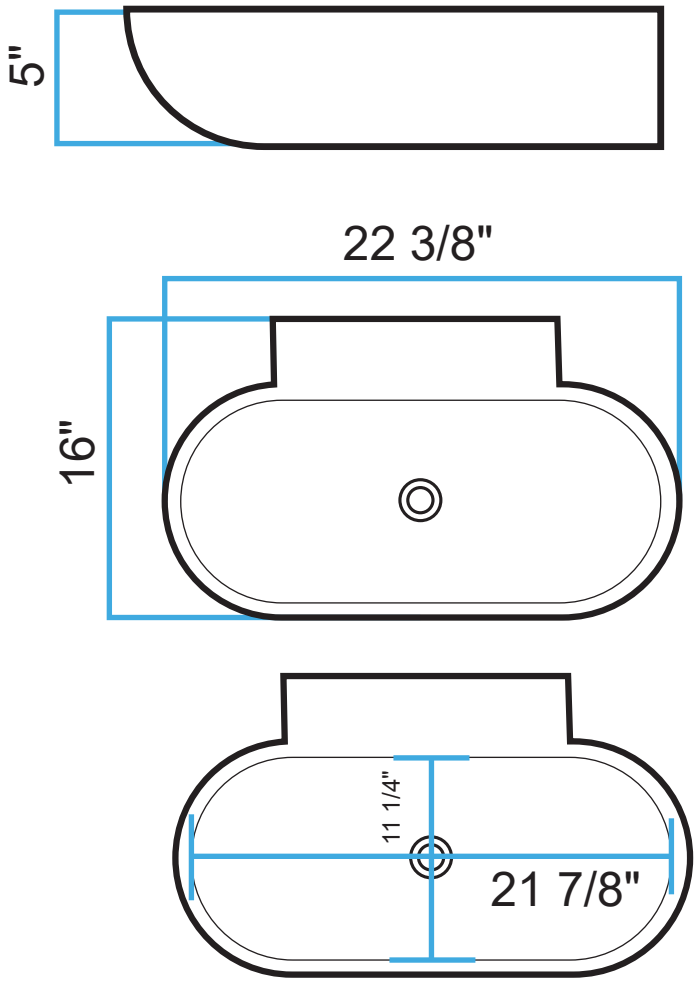
21 7/8" L x 11 1/4" W (Front to Back) (± 1/2")
Basin Depth: 4"
Back of basin to center of faucet: 2 1/2”
Back of basin to center of drain: 9 5/8”
Mounting holes center-to-center: 4 1/2”
1 3/8" Faucet Hole
Drain Not Included (Accepts Standard 1 1/2" Drain)