24V | Flexible Lighting Module Installation Instructions

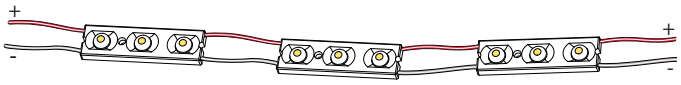

Module

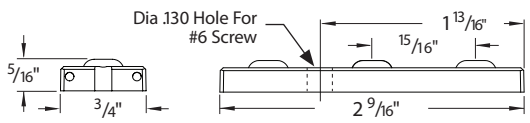

Module Strand

Module strands are manufactured with 4½" OC spacing, but can be installed as close as 2⅞" OC.

Please verify the contents of the packages!

Please read instructions entirely before starting installation.

Be sure power is turned off before installing or modifying the system.

Call Tivoli, LLC tech support with questions.

Caution: LED Flexible Lighting Module is designed to work with listed 24V DC Class 2 transformers only. Use of any other power source will cause damage, shorten the life of the fixture and may void the warranty.

Consult any and all applicable local and national codes for installation.

Do not conceal or extend exposed conductors through a building wall except per local electrical code.

Warning: With any luminaire for any application, basic safety precautions should always be followed to reduce the risk of fire, electric shock and personal injuries. This lighting system should be installed by a certified professional.

IP65

c UL us LISTED

Installation Instructions

Flexible Lighting Modules are the recommended choice for mounting in hidden from view spaces (ie; coves or backlighting). Product is field cuttable and can be shipped in specific lengths or as 34 module (8 ft) standard roll lengths (see max run on pg 2). See the following mounting instructions.

Step 1: Measure area where system is to be installed.

Step 2: Set modules to desired positions and/or spacing with double sided tape (included on back of each module).

Step 3: Mount Strand to surface with #6 Screws (by others).

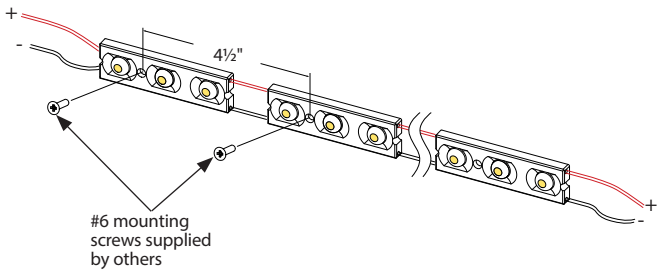

Step 4: Connect Female Leads from the 16 ft Wire (**FXLM-LEAD-16**) to the Male Ends on the lead end of the module strand.

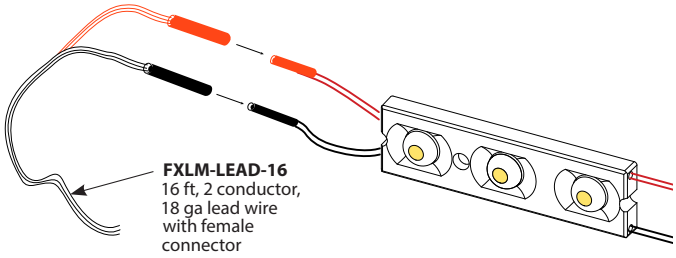

Step 5: Connect Transformer to the lead end of 16 ft wire. If a run longer than 16 feet is required, connect a J-Box at the end of the 16 Foot Wire. Locate the transformer up to 50 feet (linear wire length) away using 12ga wire to connect the Transformer to the J-Box.

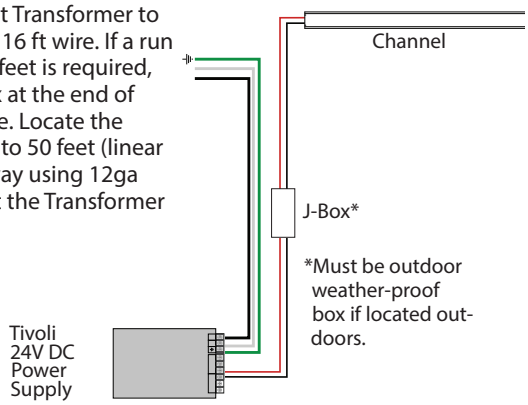

7170655

www.tivolilighting.com tel: 714-957-6101 fax: 714-427-3458

Installation Instructions: Module Strand Continued

NOTE: The connecting pins that come attached to the module strand wires are suitable for indoor and outdoor use. However, some installers prefer to use the UL rated Butt Splice Connectors **FXLM-SPLICE-CONN** for outdoor installations. Refer to the following steps to achieve a water-tight seal.

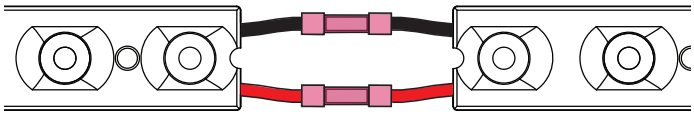

Step 6: Cut off the Pin Connectors

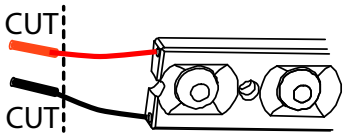

Step 7: Strip ¼" of Insulation from the end of each wire and insert one end of each wire into Butt Connector.

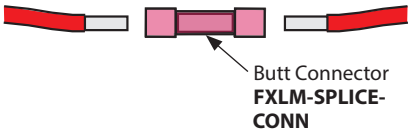

Step 8: Use Ratchet Crimping Tool to securely crimp each wire inside the Butt Connector in the areas shown.

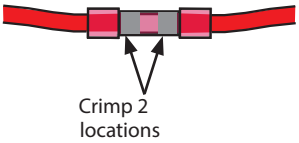

Step 9: Use high power Heat Gun (600W) to heat Butt Connector. Continue to heat until Butt Connector shrinks to a tight seal around both wire ends.This will ensure a water-tight connection.

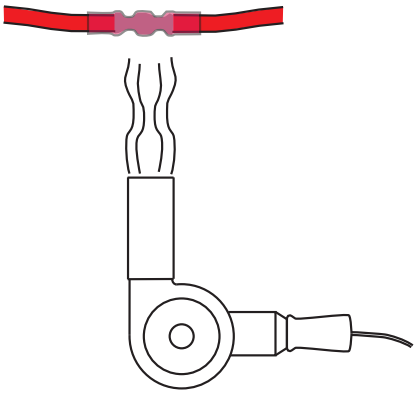

Wiring Size:

Installer calculates wire size between load and power supply to avoid voltage drop.

Please refer to NEC and local code requirements for wiring luminaire to transformer. Voltage drop calculations are the responsibility of the installer.

PRODUCT SPECIFICATION GUIDE		
LED Color	**Spacing**	**Max Run Length**
2800°K, 3200°K,4100°K, 5000°K, Blue, Green	2⅞" OC	24ft
	4½" OC	33ft
Red, Yellow	2⅞" OC	48
	4½" OC	63

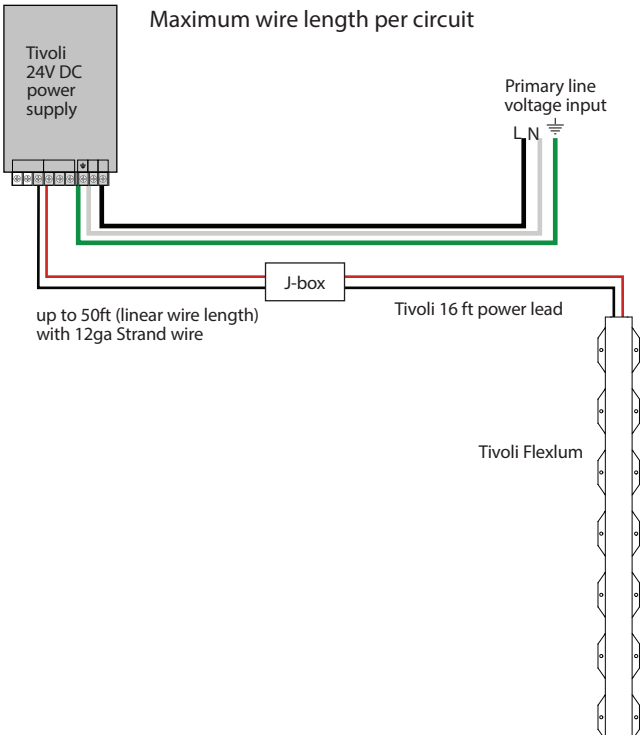

7170655

www.tivolilighting.com tel: 714-957-6101 fax: 714-427-3458

Installation Instructions: Straight or Flex Channel

Overview: Flex and Rigid Channel is available in 4' and 8' lengths. The channel may be cut in the field to fit. Measure the project area to determine placement of Channel and cut as needed. Cut off Lighting Module strand to fit channel lengths.

Step 1: Mount Module Strand to Channel using 6-32 X½" Phillips Oval Head screws (by others)

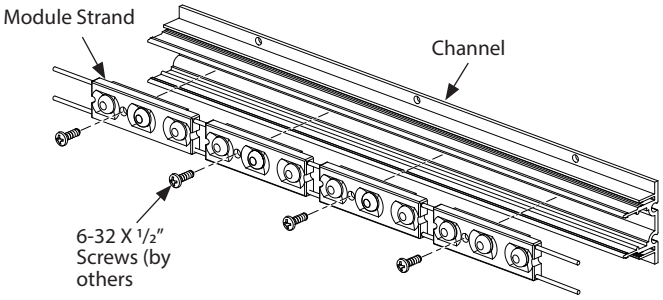

Lead Wire Installation: Determine feedpoint and place Lead Wire in position. Module Strands with Flex or Rigid Channel can use **FXLM-LEAD-16** 16 ft, 2 conductor, 18 ga lead wire with female connectors.

Step 1: Position Channel with Lead End (Male Connectors) towards feedpoint. Mount first unit to desired surface with #4 screws (by others).

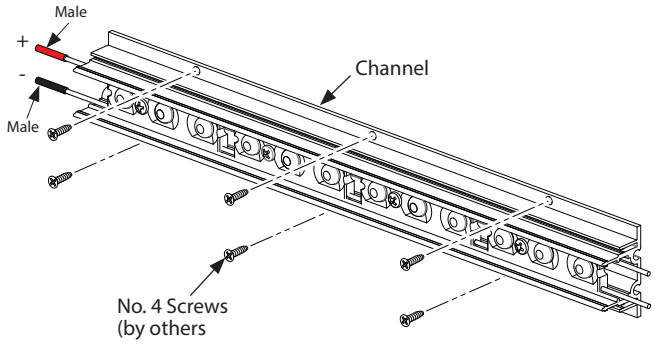

Step 2: Connect Female Leads from the 16 ft Wire (**FXLM-LEAD-16**) to the Male Ends on the lead end of the Channel.

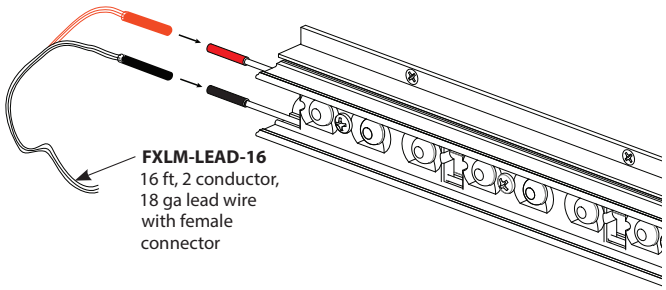

Step 5: Cut and cap the trailing end wires with wire nuts. If mounting multiple channels, Cut and cap the final trail end of the run.

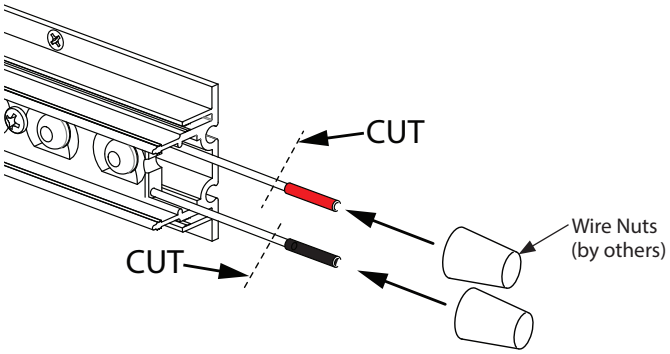

Step 3: Connect Transformer to the lead end of 16 ft wire. If a run longer than 16 feet is required, connect a J-Box at the end of the 16 Foot Wire. Locate the transformer up to 50 feet (linear wire length) away using 12 ga wire to connect the Transformer to the J-Box.

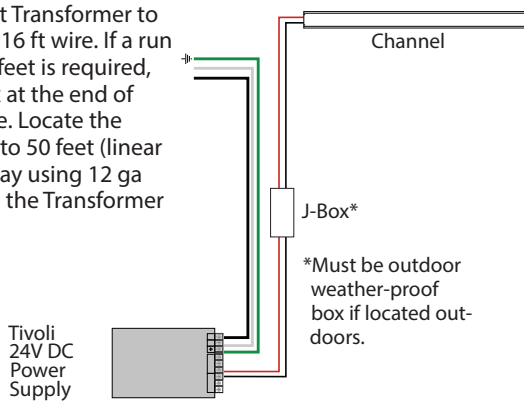

Installer calculates wire size between load and power supply to avoid voltage drop.

Please refer to NEC and local code requirements for wiring luminaire to transformer. Voltage drop calculations are the responsibility of the installer.

7170655

www.tivolilighting.com tel: 714-957-6101 fax: 714-427-3458

Installation Instructions: Connecting multiple channels

Step 2: Assemble Module Strand to channel as before and position channel flush with previous channel, as shown.

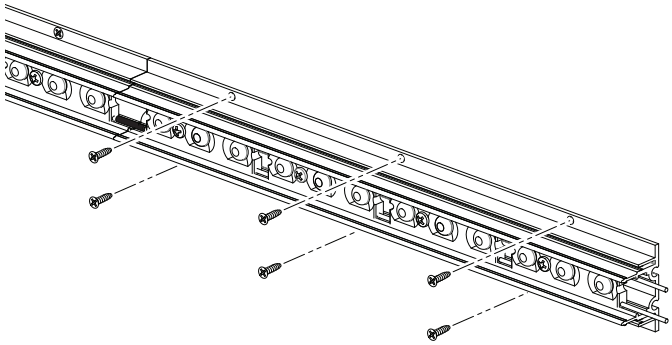

Step 4: Remove Screw from one module on each unit to access wiring channel.

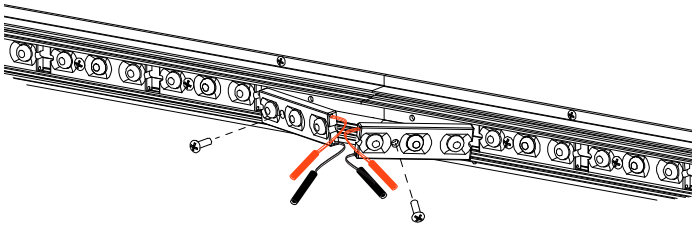

Step 5: Connect Leads (Male/Female).

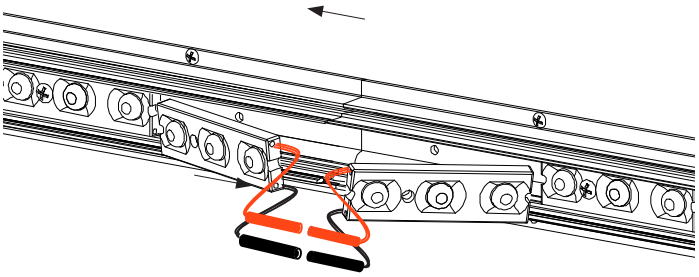

Step 11: Slide the connected wires and connectors under the modules with the Black one under one side and Red under the opposite side and re-attach the two loose modules.

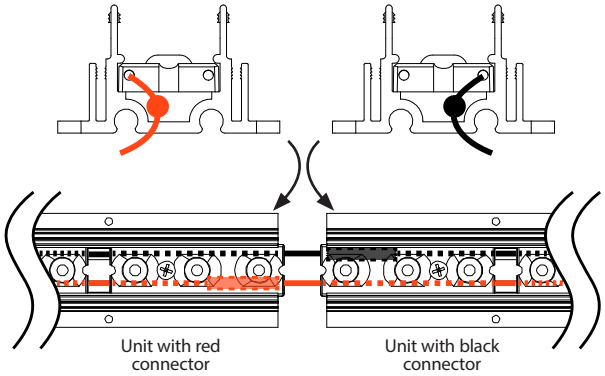

Step 5: Cut and cap the trailing end wires with wire nuts. If mounting multiple channels, Cut and cap the final trail end of the run.

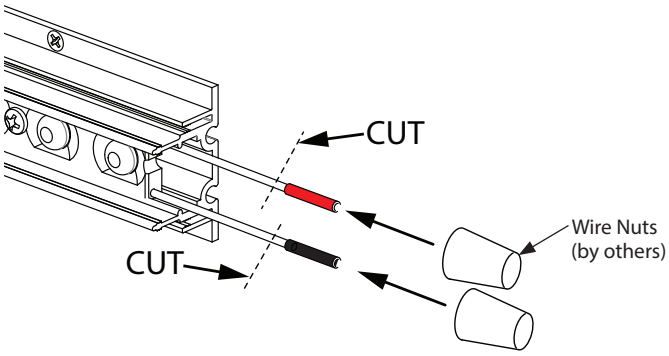

Step 6: Connect Lead Wire Jumper to power supply. See all wire sizing and maximum linear run notes on pages 2 and 3.

7170655

www.tivolilighting.com tel: 714-957-6101 fax: 714-427-3458